105-C16AA-A2E-3-4GW-6P

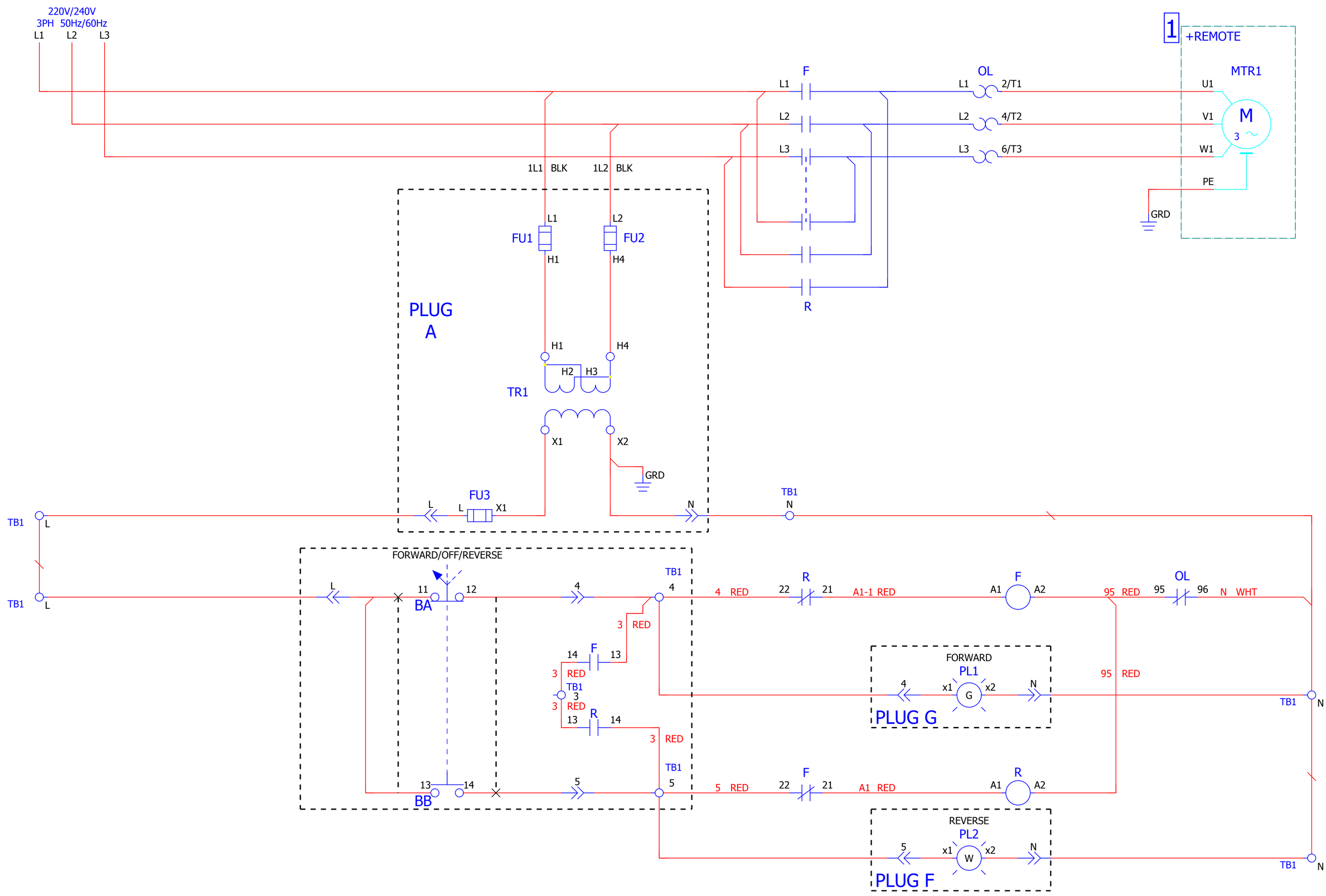

NOTES:

1
REMOTE DEVICE

2
OPTIONAL DEVICE

3
THIS DEVICE MAY BE SUPPLIED LESS AN OVERLOAD RELAY. IT IS THE CUSTOMER'S RESPONSIBILITY TO SUPPLY AN OVERLOAD RELAY AND MAKE THE APPROPRIATE CONNECTIONS.
WARNING: A MOTOR CONNECTED WITH 2-WIRE CONTROL MAY START AUTOMATICALLY WHEN USED WITH AN AUTOMATIC RESET OVERLOAD RELAY

4
ADDITIONAL CONTROL CIRCUIT OVERCURRENT PR0TECTI0N MAY BE REQUIRED. REFER TO "NEC" AND/OR CANADIAN ELEC1RICAL CODE.

5
ORIENTATION OF OVERLOAD RELAY CONTACTS MAY CHANGE DEPENDING ON EUTECTIC, BI-METALIC, OR E1 PLUS OVERLOAD RELAY.

6
CUSTOMER INSTALLED

Wire Connector Torque	
Line Terminal (Lb.In.)	Load Terminal (Lb.In.)
13...22	22..30

Rockwell Automation

CONFIDENTIAL AND PROPRIETARY INFORMATION: THIS DOCUMENT CONTAINS CONFIDENTIAL AND PROPRIETARY INFORMATION OF ROCKWELL AUTOMATION, INC., AND MAY NOT BE USED, COPIED OR DISCLOSED TO OTHERS, EXCEPT WITH THE AUTHORIZED WRITTEN PERMISSION OF ROCKWELL AUTOMATION, INC.

Title: IEC NON COMBO

S.O.

CATALOG NO. 105-C16AA-A2E-3-4GW-6P

Drawn by: AUTO_GEN	Date: 09/29/17	Sheet: 1 of 2	Ver: 00	Size: D