150S-D21JBD-3B-BP

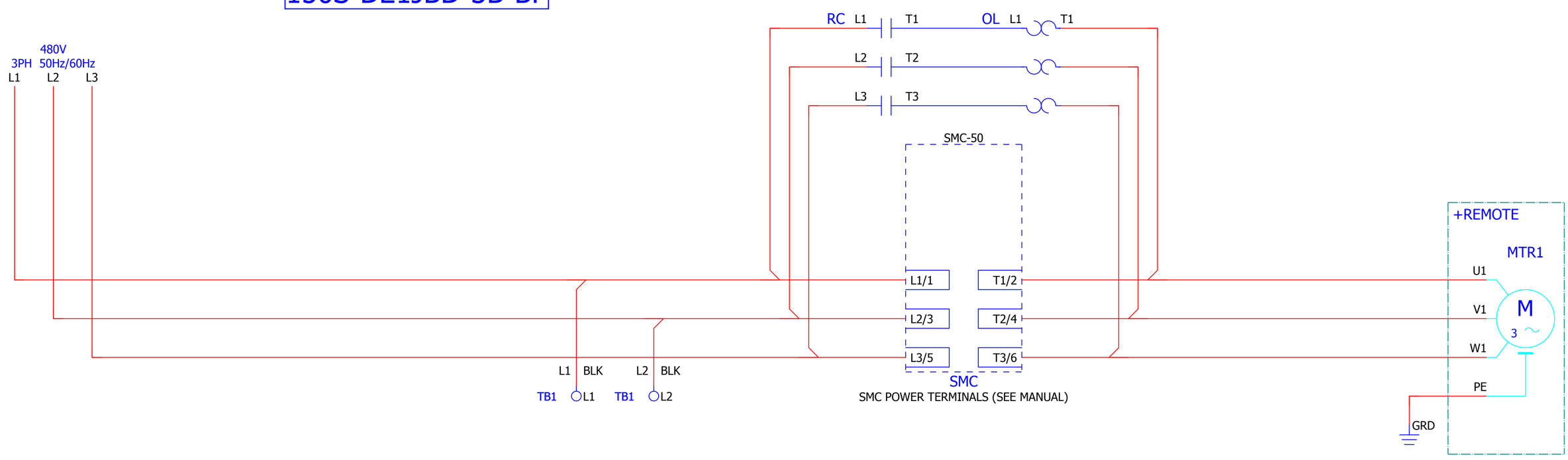

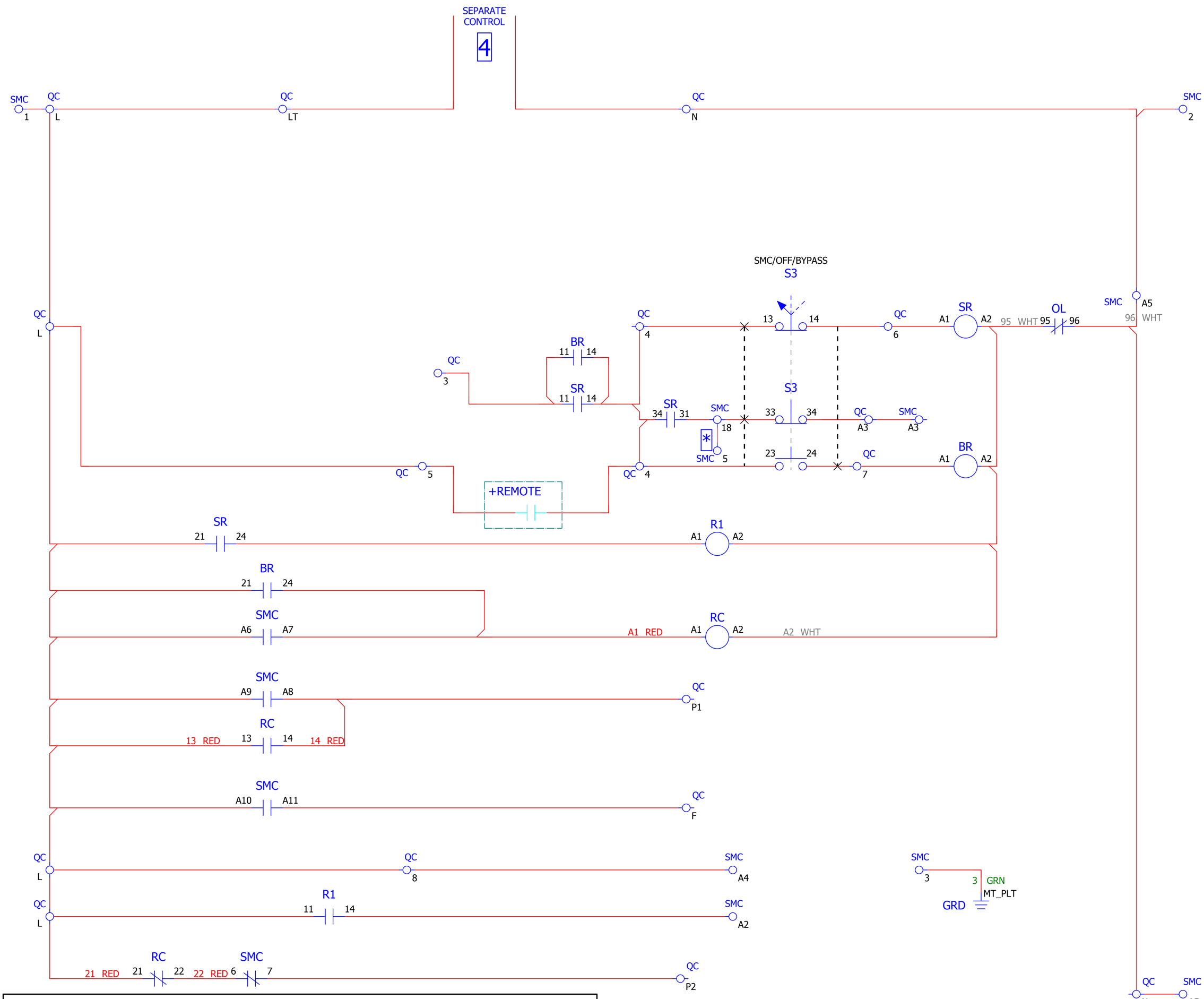

NOTES:

* ADD JUMPER FROM TERMINAL BLOCK "18" TO TERMINAL BLOCK "5" WHEN USING DPI (-HC3 or -20*) JUMPER IS INCLUDED IN RAIL IN TERMINAL BLOCK 18.

** REMOVE PRE-INSTALLED YELLOW JUMPER BETWEEN TERMINAL BLOCK "L" AND TERMINAL BLOCK"8" WHEN USING AUX COMMAND DEVICE

1 SMC FACTORY PRE-PROGRAMMED PARAMETERS; A2=START. A3=COAST. A4=OPTION STOP
Product specific (not test setup ones):
- PAR# 56 Disable 0
- PAR# 57 Disable 0
- PAR# 172 Aux1 Config to Ext Bypass 4
- PAR# 176 Aux2 Config to Fault Normal (0)
- PAR# 177 Enabled (1)
- PAR# 230 (Upper) XXXX XXXX 0000 0010
- PAR# 230 (Lower) 0000 0000 0000 0001

SMC50 I/O device parameters (150-SM4):
- With HIM and Communication Card installed In Port 00 SMC-50
- PAR # 148 X000 0000 0001 0100
- PAR # 3 Input 2 (A2) Start 1
- PAR # 4 Input 3 (A3) Coast 2
- PAR # 5 Input 4 (A4) Stop Option 3
- PAR # 6 Aux1Cfg Ext Bypass 4
- PAR # 10 Aux2Cfg Normal 0
- Set PAR # 14 Aux3Cfg Fault 2

2 RELAY FUNCTIONS;
R1: PREVENT RACE CONDITION BETWEEN A3 & A2
BR 11-14: HOLD-IN CONTACT WITH START-STOP FOR BYPASS
SR 11-14: HOLD-IN CONTACT WITH START-STOP FOR SR RELAY (STARTS SMC)
SR 31-34: STARTS SMC WITH PILOT DEVICE (NO DPI PRESENT)
R1 11-14: SMC START COMMAND

3 USE 75ºC CU WIRE ONLY

4 LINE FUSES SUPPLIED BY CUSTOMER WHEN DISCONNECT SWITCH IS SUPPLIED. REFER TO NEC WHEN SELECTING SHORT CIRCUIT PROTECTION

5 ADDITIONAL CONTROL CIRCUIT OVERCURRENT PROTECTION REQUIRED FOR NON-COMBINATION STARTERS. REFER TO NATIONAL ELECTRIC CODE.

Wire Connector Torque	
Line Terminal (Lb.In.)	Load Terminal (Lb.In.)
275	275

Rockwell Automation

CONFIDENTIAL AND PROPRIETARY INFORMATION: THIS DOCUMENT CONTAINS CONFIDENTIAL AND PROPRIETARY INFORMATION OF ROCKWELL AUTOMATION, INC., AND MAY NOT BE USED, COPIED OR DISCLOSED TO OTHERS, EXCEPT WITH THE AUTHORIZED WRITTEN PERMISSION OF ROCKWELL AUTOMATION, INC.

Title: SMC NON COMBO

S.O.

CATALOG NO. 150S-D21JBD-3B-BP

Drawn by: AUTO_GEN **Date:** 12/18/17 **Sheet:** 1 of 2 **Ver:** 00 **Size:** D