152F-D36JAD-J60-4GR

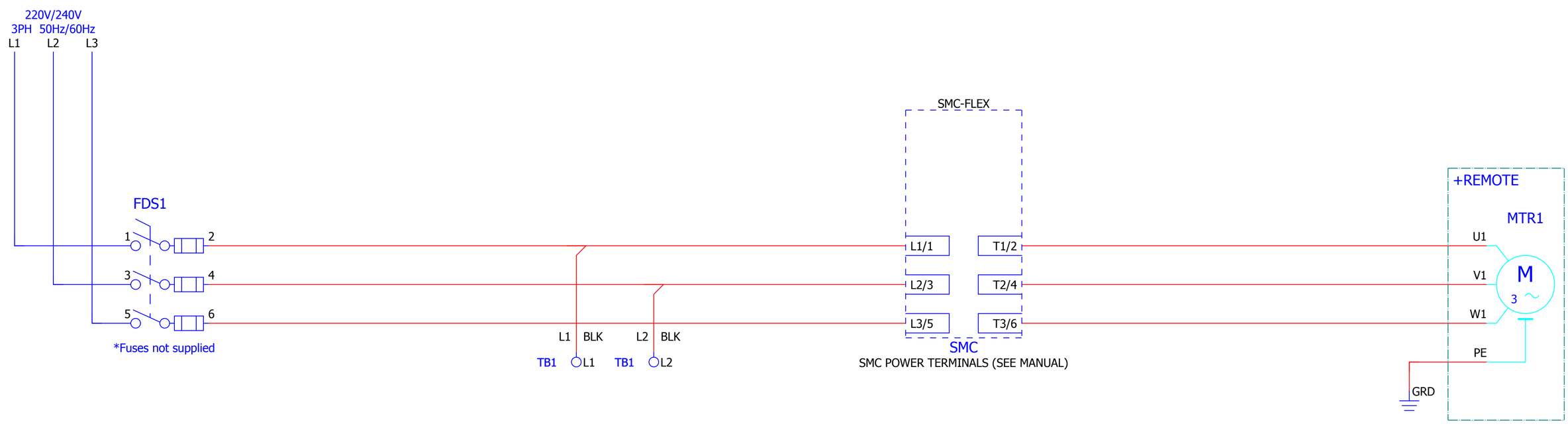

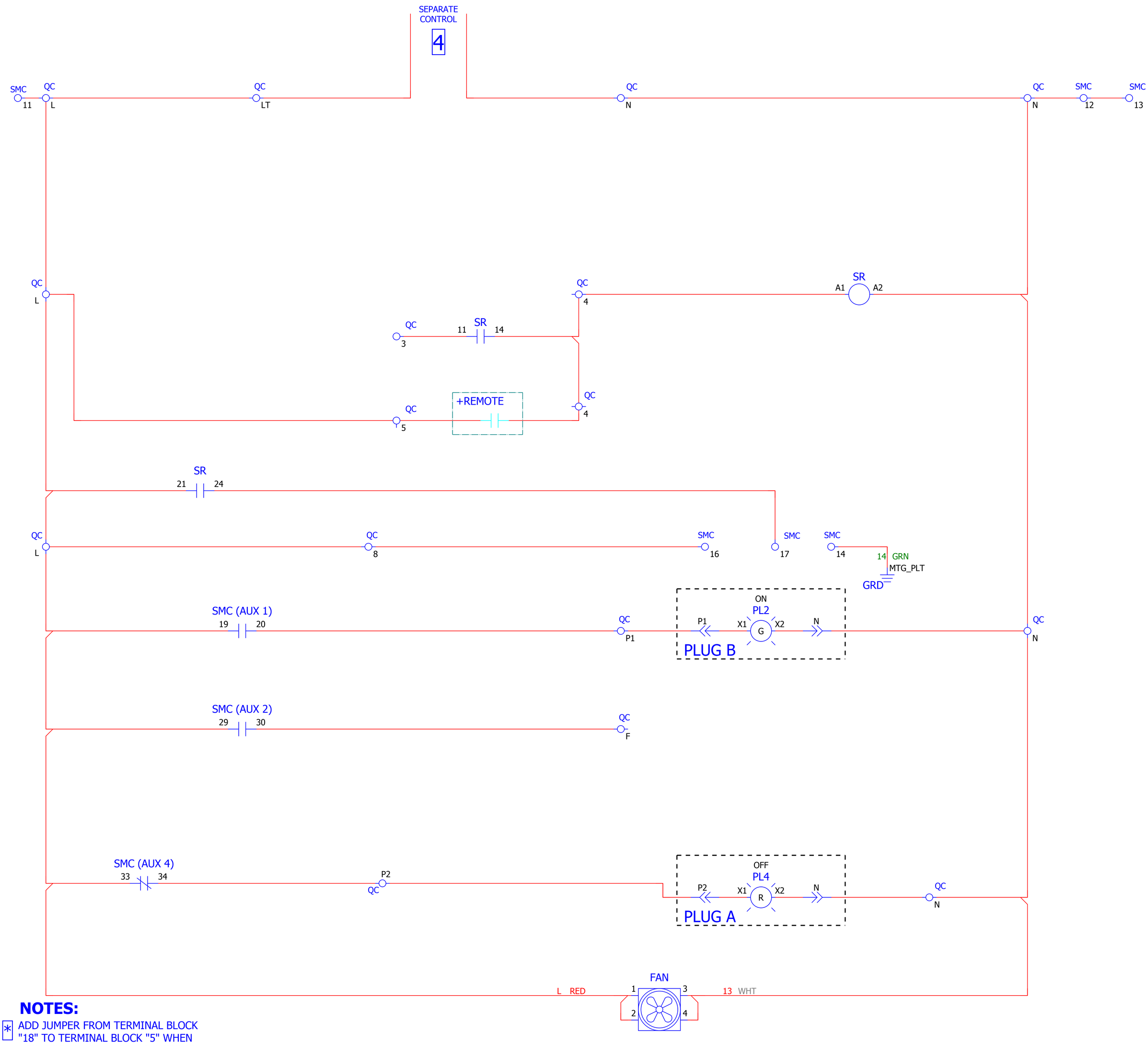

NOTES:

* ADD JUMPER FROM TERMINAL BLOCK "18" TO TERMINAL BLOCK "5" WHEN USING DPI (-HC3 or -20*) JUMPER IS INCLUDED IN RAIL IN TERMINAL BLOCK 18.

** REMOVE PRE-INSTALLED YELLOW JUMPER BETWEEN TERMINAL BLOCK "L" AND TERMINAL BLOCK"8" WHEN USING AUX COMMAND DEVICE

1 SMC FACTORY PRE-PROGRAMMED PARAMETERS;
PARAMETER 109: AUX4CFG SET TO NORMAL NC TO NORMAL NC

2 USE 75ºC CU WIRE ONLY

3 LINE FUSES SUPPLIED BY CUSTOMER WHEN DISCONNECT SWITCH IS SUPPLIED. REFER TO NEC WHEN SELECTING SHORT CIRCUIT PROTECTION

4 ADDITIONAL CONTROL CIRCUIT OVERCURRENT PROTECTION REQUIRED FOR NON-COMBINATION STARTERS. REFER TO NATIONAL ELECTRIC CODE.

5 FOR UNITS WITH DPI (HIM OR COMM CARD), SET LOGIC MASK (PARAMETER 87) TO "0010 0100"

***

Wire Connector Torque	
Line Terminal (Lb.In.)	Load Terminal (Lb.In.)
500	375

Rockwell Automation

CONFIDENTIAL AND PROPRIETARY INFORMATION: THIS DOCUMENT CONTAINS CONFIDENTIAL AND PROPRIETARY INFORMATION OF ROCKWELL AUTOMATION, INC., AND MAY NOT BE USED, COPIED OR DISCLOSED TO OTHERS, EXCEPT WITH THE AUTHORIZED WRITTEN PERMISSION OF ROCKWELL AUTOMATION, INC.

Title: SMC COMBO

S.O.

CATALOG NO. 152F-D36JAD-J60-4GR

Drawn by: AUTO_GEN | **Date:** 01/12/18 | **Sheet:** 1 of 2 | **Ver:** 00 | **Size:** D