153C-D31JAD-D60-1-4RGA-6XP

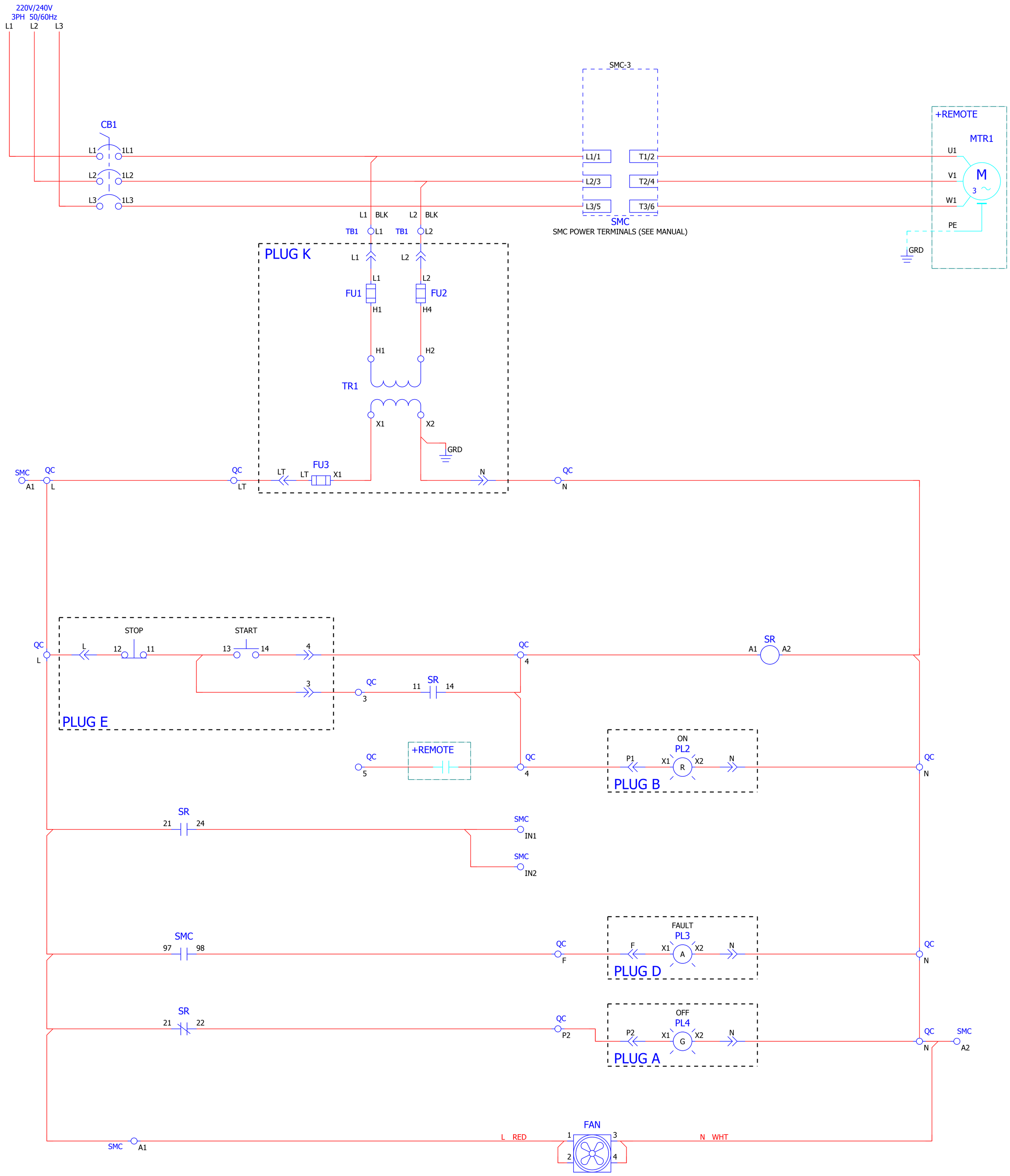

NOTES:

1. USE 75ºC CU WIRE ONLY
2. LINE FUSES SUPPLIED BY CUSTOMER WHEN DISCONNECT SWITCH IS SUPPLIED. REFER TO NEC WHEN SELECTING SHORT CIRCUIT PROTECTION
3. ADDITIONAL CONTROL CIRCUIT OVERCURRENT PROTECTION REQUIRED FOR NON-COMBINATION STARTERS. REFER TO NATIONAL ELECTRIC CODE.
4. DIP SWITCH DEFAULT FACTORY SETTINGS

1= O	9= O
2= I	10= O
3= O	11= I
4= O	12= O
5= I	13= O
6= O	14= O
7= O	15= I
8= O	16= O

Wire Connector Torque	
Line Terminal (Lb.In.)	Load Terminal (Lb.In.)
220	375

Rockwell Automation

CONFIDENTIAL AND PROPRIETARY INFORMATION: THIS DOCUMENT CONTAINS CONFIDENTIAL AND PROPRIETARY INFORMATION OF ROCKWELL AUTOMATION, INC., AND MAY NOT BE USED, COPIED OR DISCLOSED TO OTHERS, EXCEPT WITH THE AUTHORIZED WRITTEN PERMISSION OF ROCKWELL AUTOMATION, INC.

Title: SMC COMBO

S.O.

CATALOG NO. 153C-D31JAD-D60-1-4RGA-6XP

Drawn by: AUTO_GEN | **Date:** 01/03/18 | **Sheet:** 1 of 2 | **Ver:** 00 | **Size:** D