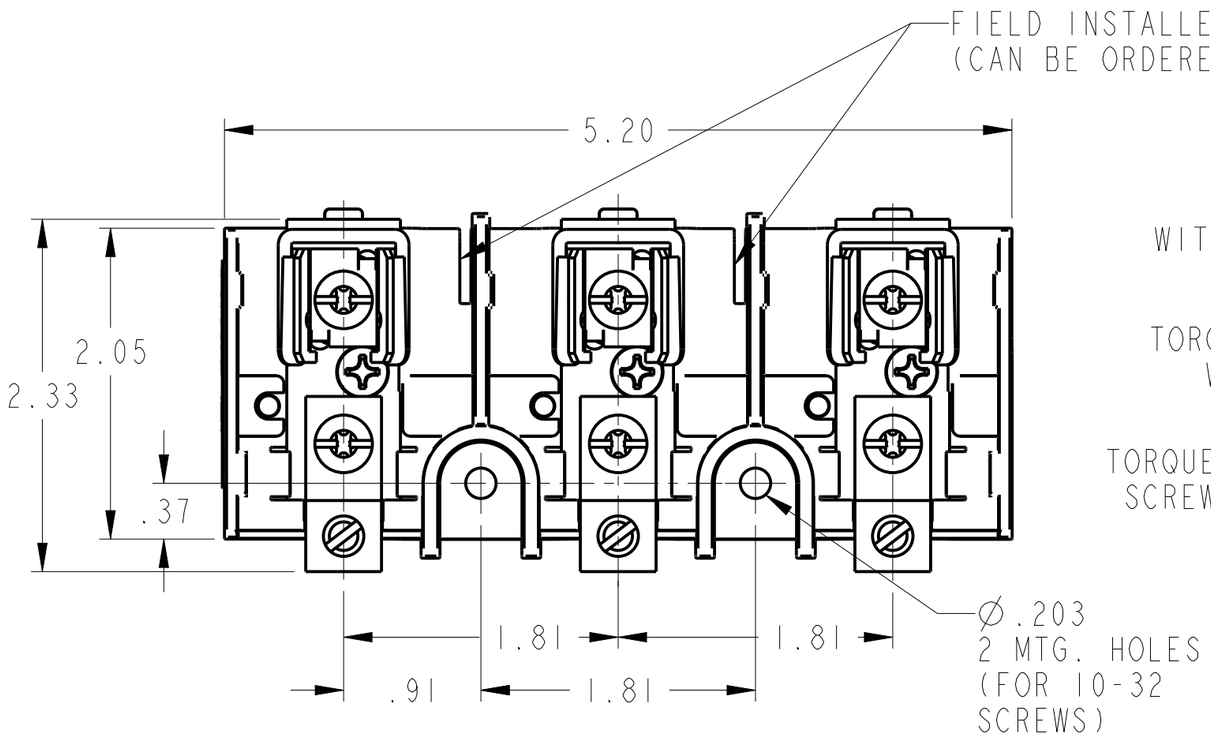

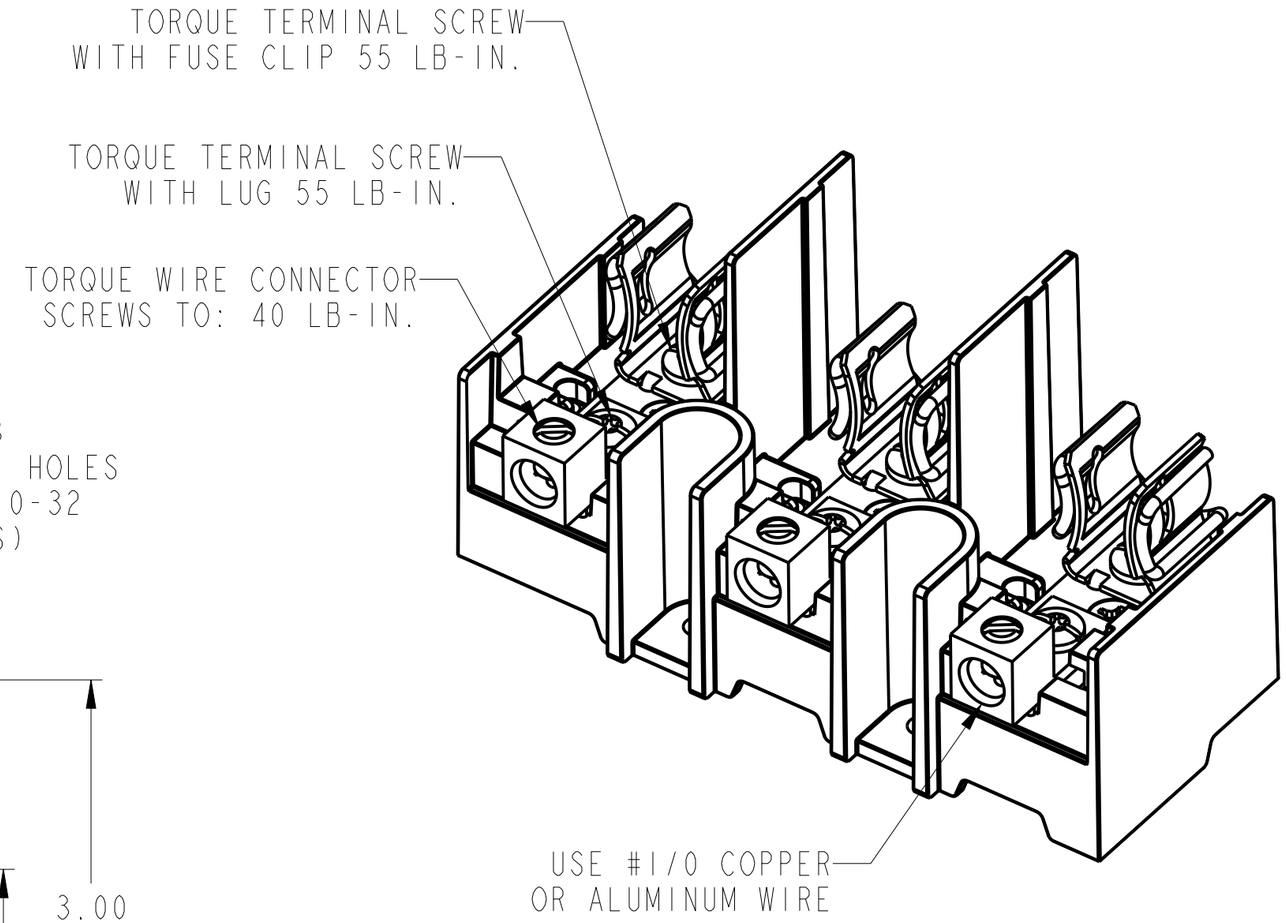

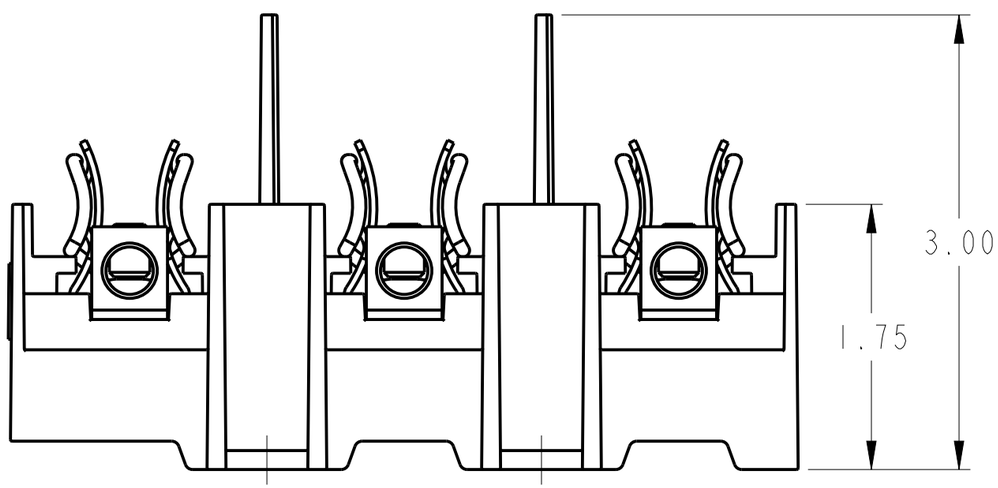

Rockwell Automation

CONFIDENTIAL AND PROPRIETARY INFORMATION.
THIS DOCUMENT CONTAINS CONFIDENTIAL AND PROPRIETARY INFORMATION OF ROCKWELL AUTOMATION, INC. AND MAY NOT BE USED, COPIED OR DISCLOSED TO OTHERS, EXCEPT WITH THE AUTHORIZED WRITTEN PERMISSION OF ROCKWELL AUTOMATION, INC.

1494U, 30 AMP FUSE BLOCK DIM DRAWING

Sheet 1 Of 1

Size		Ver
B	10001235435	00

Drawn by: LEQUENTI | Date: JUL-16-2014

10001235434.ASM