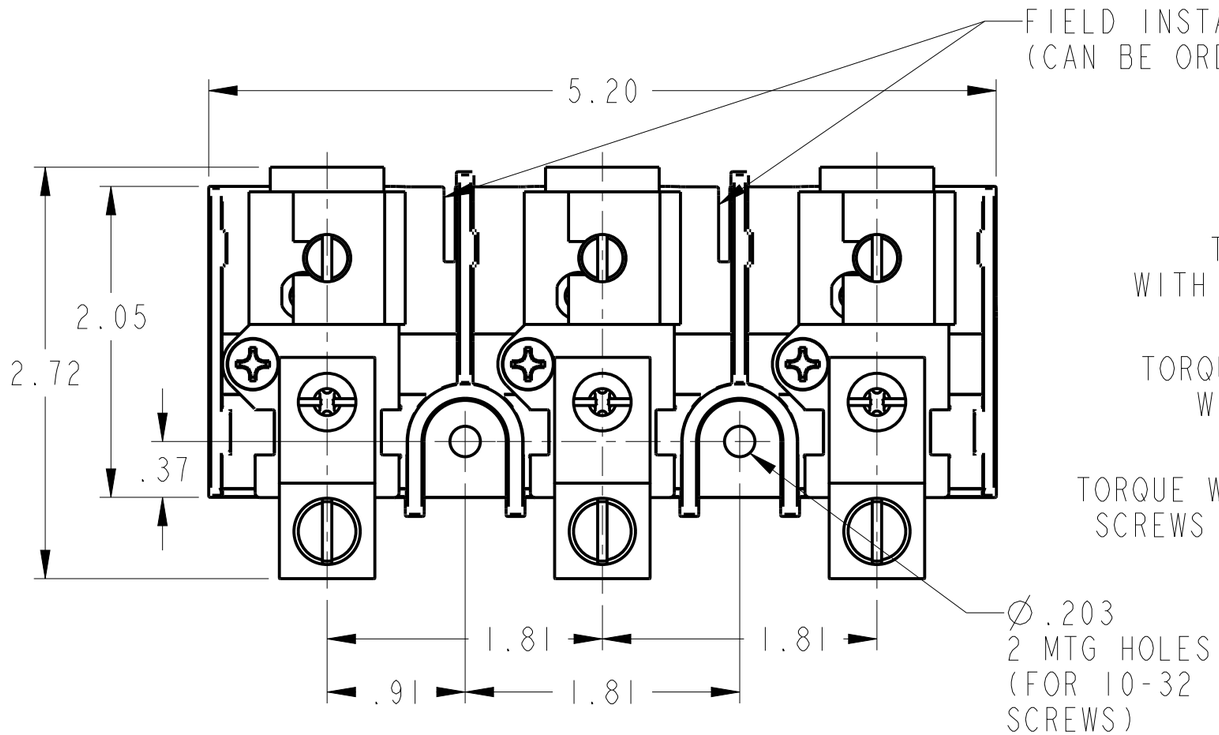

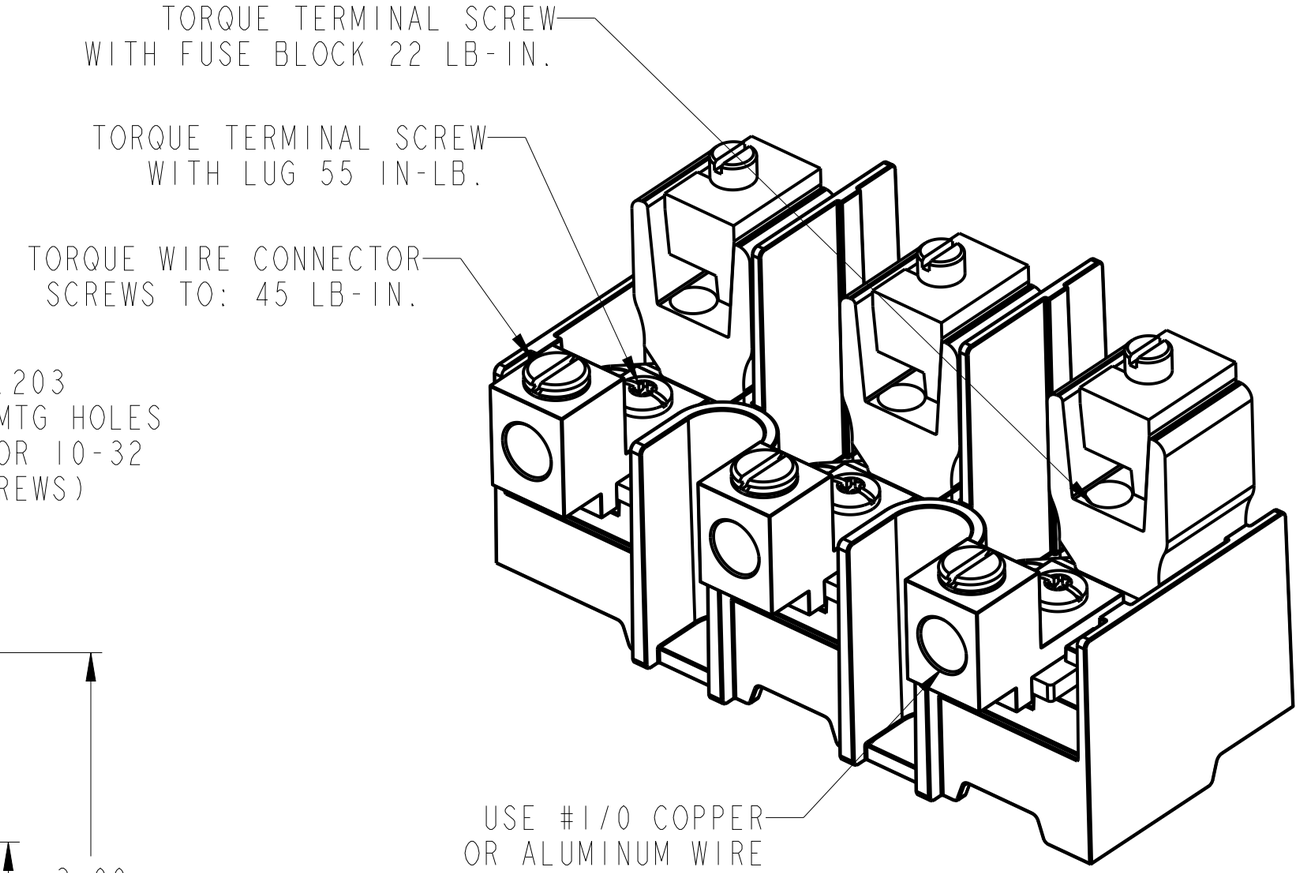

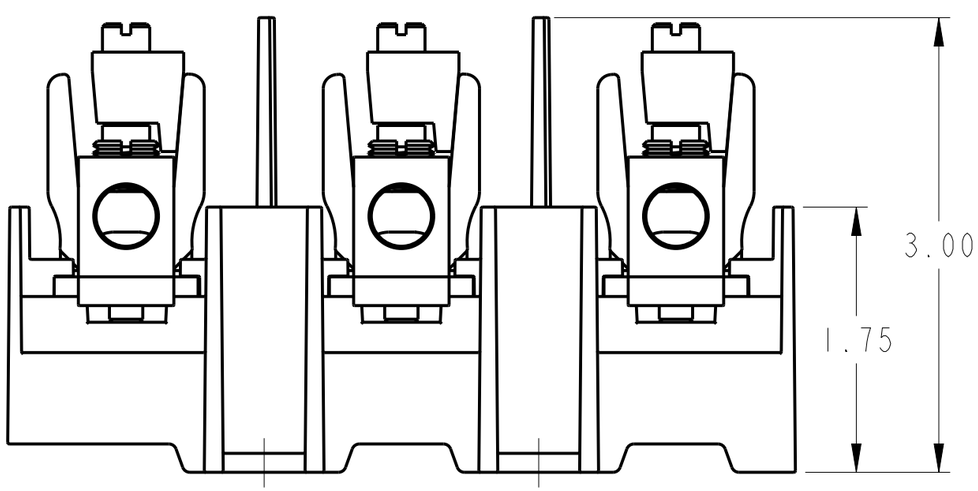

Rockwell Automation

1494U, 100 AMP FUSE BLOCK DIM DRAWING

CONFIDENTIAL AND PROPRIETARY INFORMATION.
THIS DOCUMENT CONTAINS CONFIDENTIAL AND PROPRIETARY INFORMATION OF ROCKWELL AUTOMATION, INC. AND MAY NOT BE USED, COPIED OR DISCLOSED TO OTHERS, EXCEPT WITH THE AUTHORIZED WRITTEN PERMISSION OF ROCKWELL AUTOMATION, INC.

Sheet 1 Of 1

Size		Ver
B	10001237277	00

Drawn by: LEQUENTI | Date: OCT-01-2014

10001237276.asm