TERMINAL FOR FCCU-AL ASSEMBLY

ITEM	DESCRIPTION	QTY	AB CAT NUMBER
1	MOLDED CASE CIRCUIT BREAKER	1	140G-N-3P CB
2	FCCU-AL TERMINAL (3 PCS)	2 SETS	140G-N-TLA43
3	TERMINAL COVER HIGH	2	140G-N-TC3H

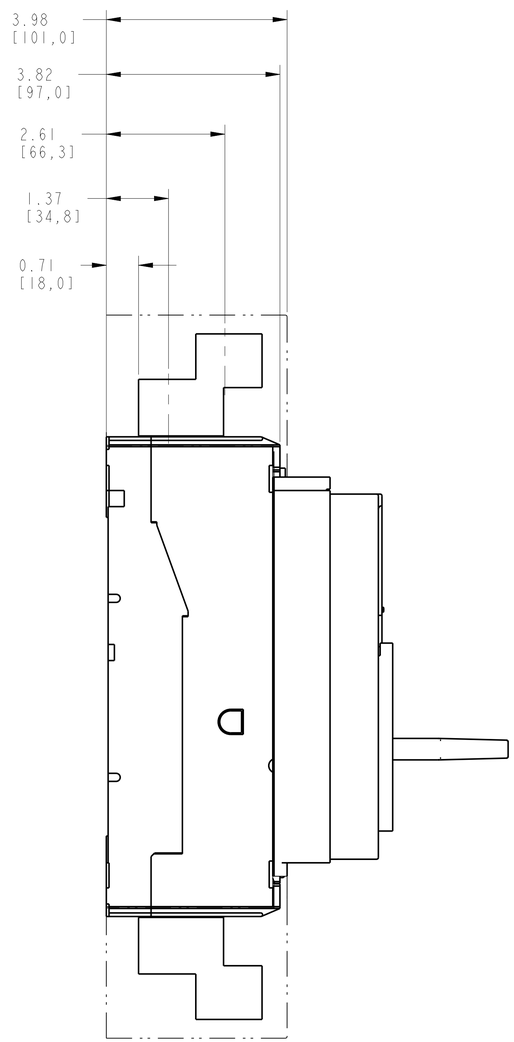

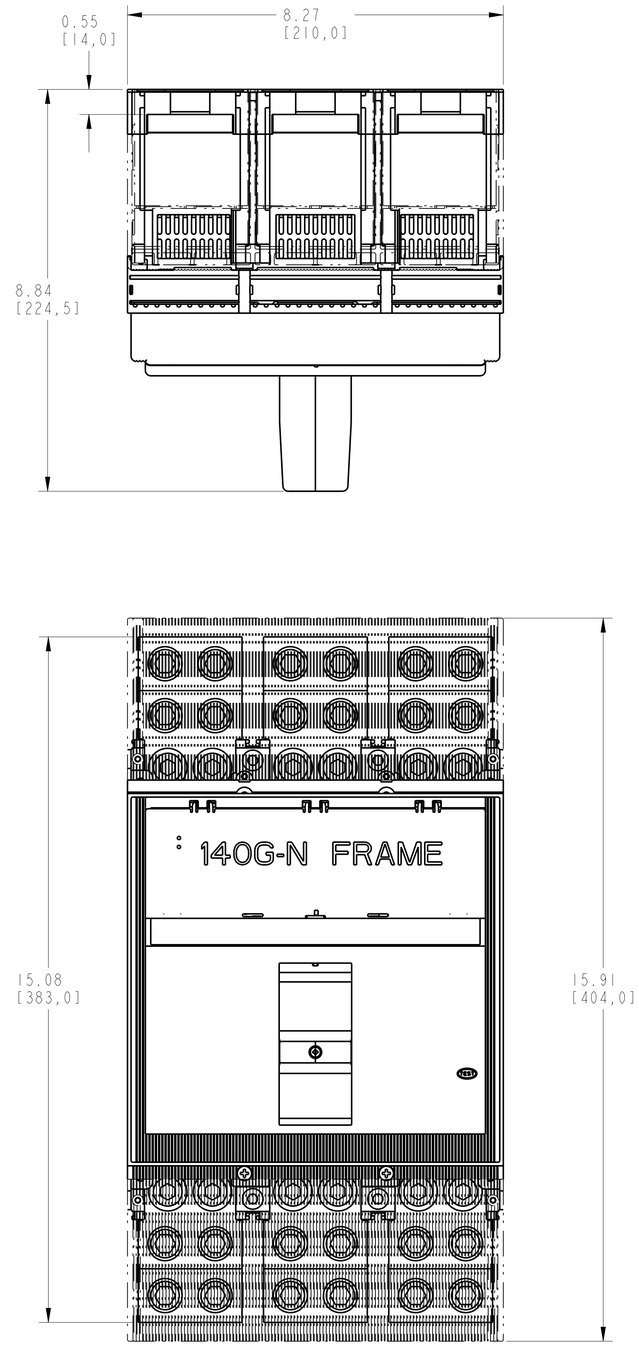

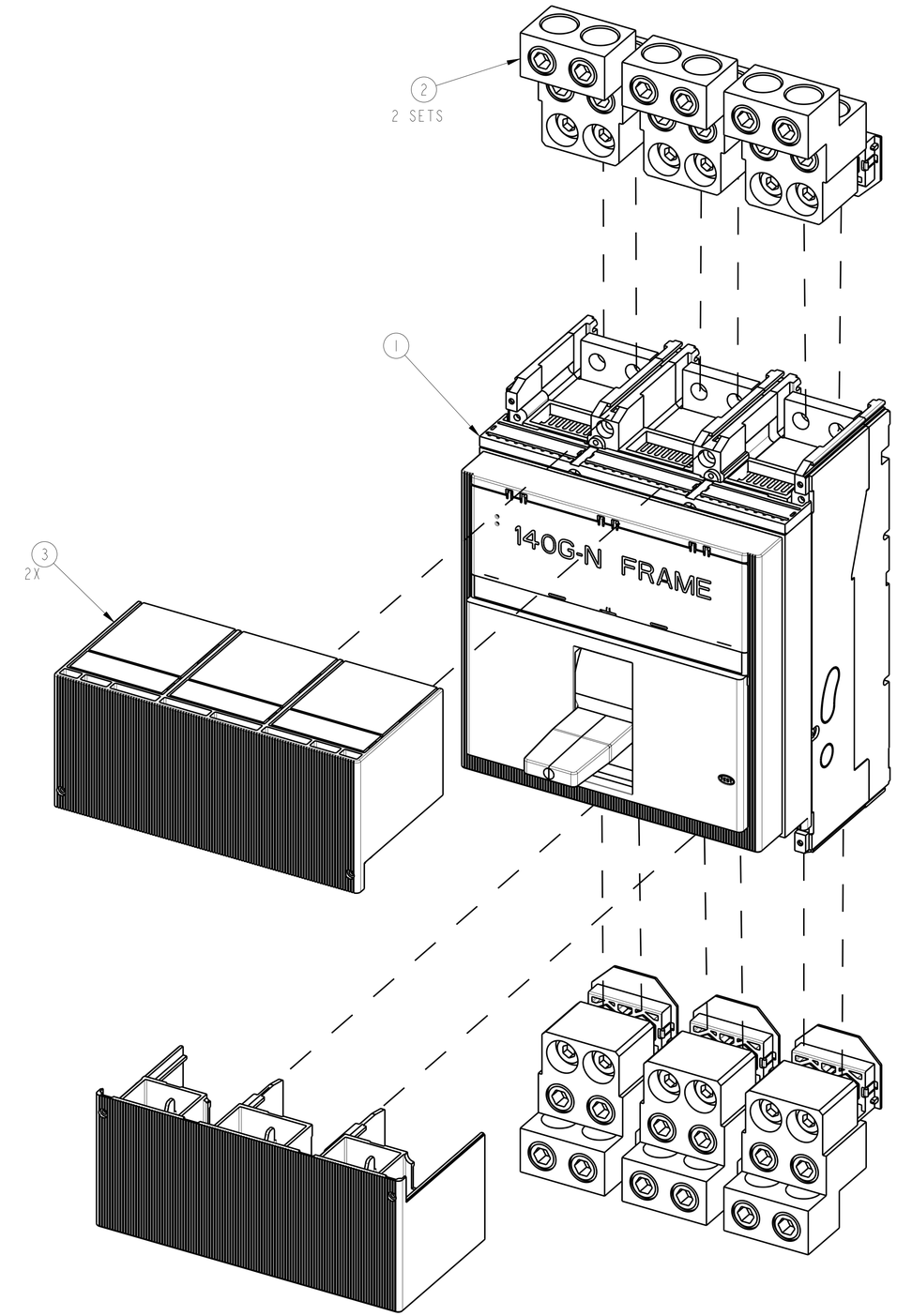

TERMINAL FOR FCCU-AL ASSEMBLED TO 140G-N-3-POLE

SCALE 0.6:1

Rockwell Automation

CONFIDENTIAL AND PROPRIETARY INFORMATION.
THIS DOCUMENT CONTAINS CONFIDENTIAL AND PROPRIETARY INFORMATION OF ROCKWELL AUTOMATION, INC. AND MAY NOT BE USED, COPIED OR DISCLOSED TO OTHERS, EXCEPT WITH THE AUTHORIZED WRITTEN PERMISSION OF ROCKWELL AUTOMATION, INC.

FCCU-AL ASSEMBLED TO 140G-N-3P CB

Sheet 1 Of 2

Drawn by: UMUNUSW | Date: OCT-16-2013

Size: D | 10000849072 | Ver: 00

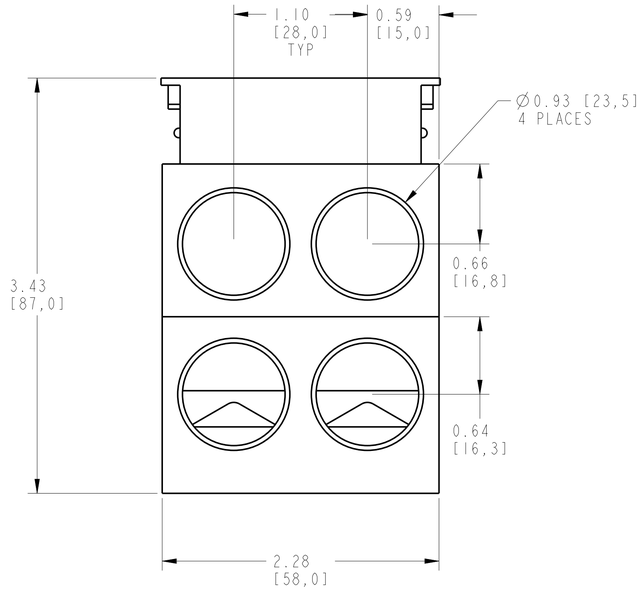

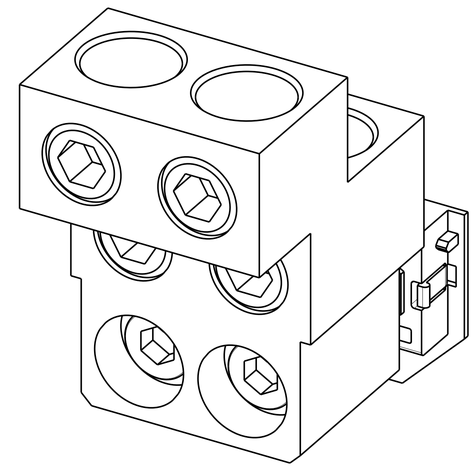

ISOMETRIC VIEW

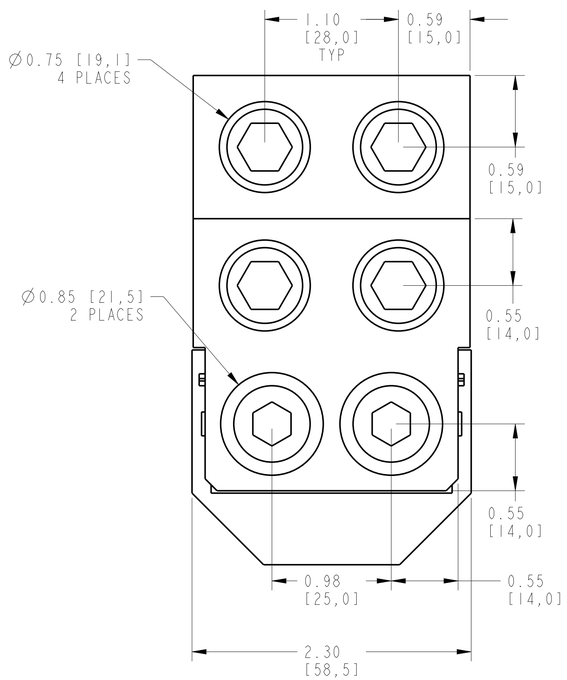

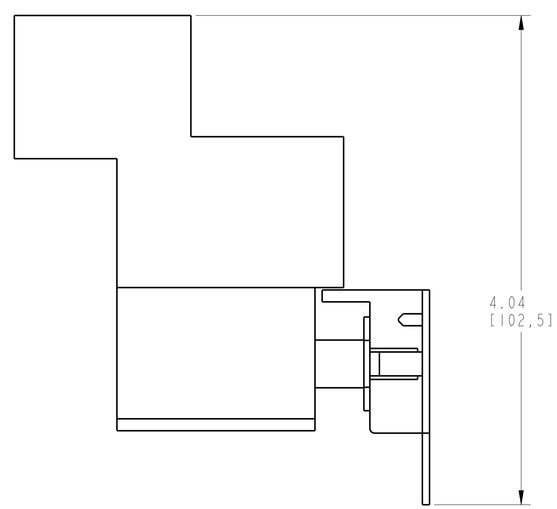

ITEM 2 : TERMINAL FOR FCCU-AL
SCALE 1.6:1

Rockwell Automation

CONFIDENTIAL AND PROPRIETARY INFORMATION.
THIS DOCUMENT CONTAINS CONFIDENTIAL AND PROPRIETARY INFORMATION OF ROCKWELL AUTOMATION, INC. AND MAY NOT BE USED, COPIED OR DISCLOSED TO OTHERS, EXCEPT WITH THE AUTHORIZED WRITTEN PERMISSION OF ROCKWELL AUTOMATION, INC.

FCCU-AL ASSEMBLED TO 140G-N-3P CB

Sheet 2 Of 2

Size		Ver
D	10000849072	00

Drawn by: UMUNUSW | Date: OCT-16-2013