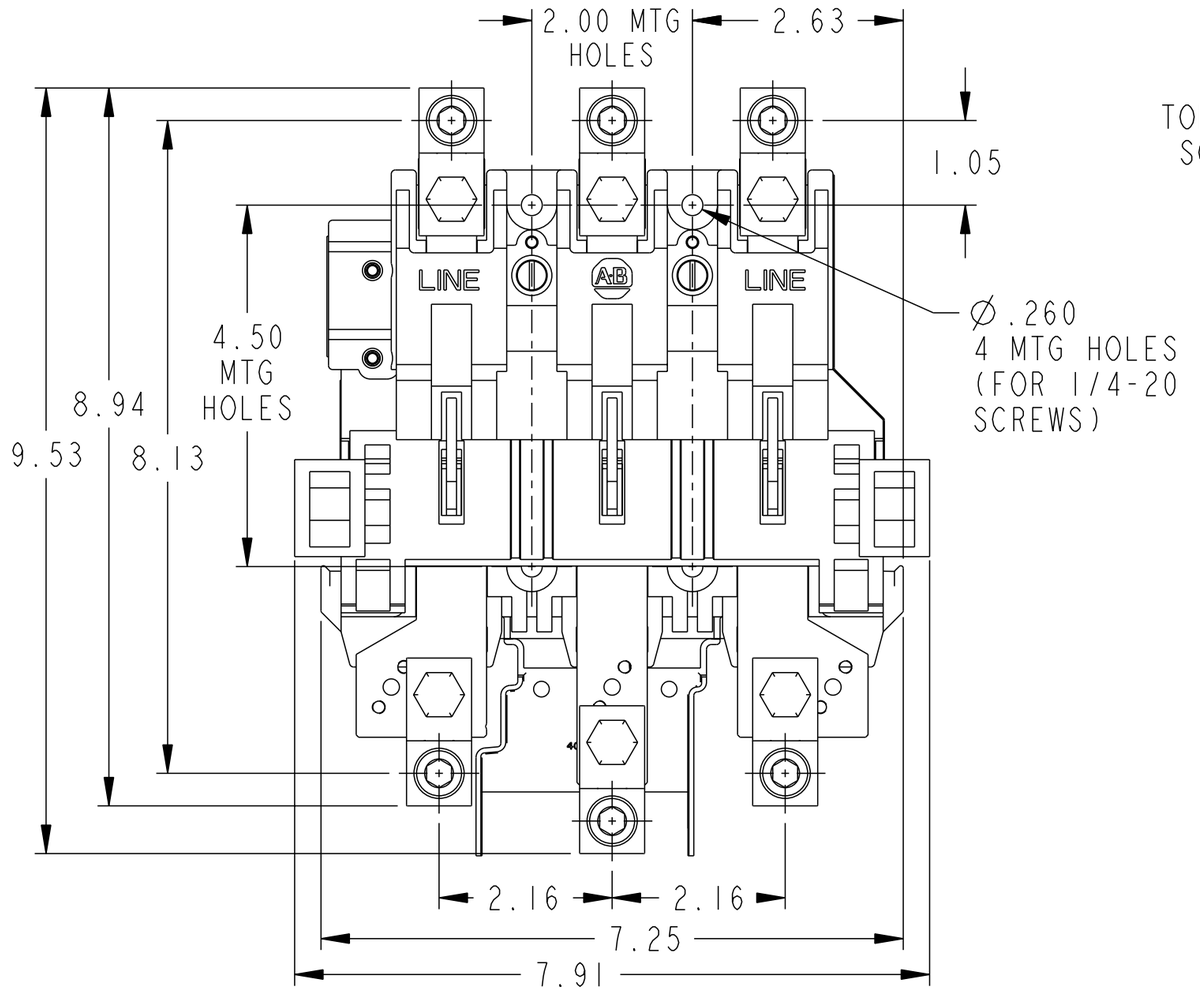

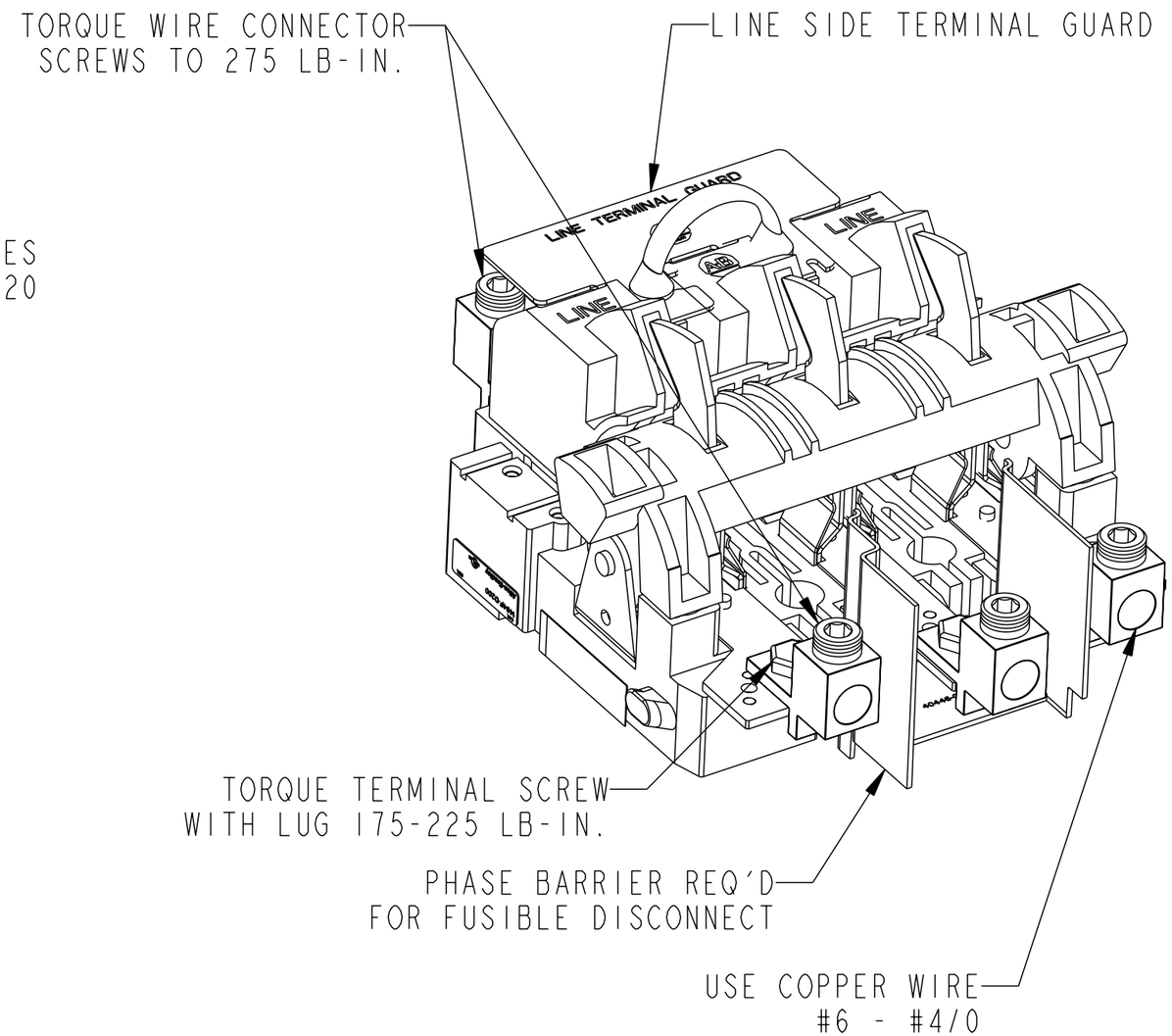

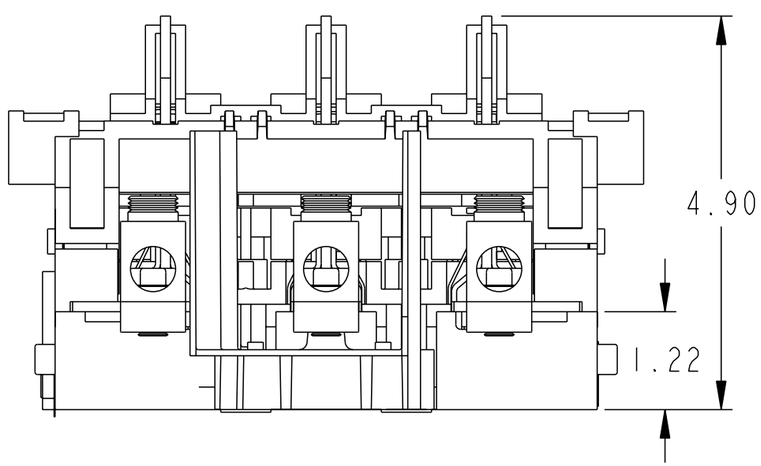

PARTS MUST CONFORM TO APPLICABLE ROCKWELL AUTOMATION MANUFACTURING STANDARDS

CAD DOCUMENT

FILE NAME 40045_566

REFERENCES				
REVISION AUTHORIZATION		DIMENSIONS APPLY BEFORE SURFACE TREATMENT DIMENSIONS IN INCHES TOLERANCES UNLESS OTHERWISE SPECIFIED	DIMENSION DRAWING FOR 200 AMP 1494F L.H. SWITCH 1494F-DX200 SERIES D	
1	1019819		**Rockwell Automation**	
		.XX:± --		
		.XXX:± --	DR. QUENTIN	DATE 12-01-05
		ANGLES:± --	CHKD. JUTZ	DATE 12-01-05
			APPD. KOZICZKOWSKI	DATE 12-01-05

CONFIDENTIAL AND PROPRIETARY INFORMATION
THIS DOCUMENT CONTAINS CONFIDENTIAL AND PROPRIETARY INFORMATION OF ROCKWELL AUTOMATION, INC. AND MAY NOT BE USED, COPIED OR DISCLOSED TO OTHERS, EXCEPT WITH THE AUTHORIZED WRITTEN PERMISSION OF ROCKWELL AUTOMATION, INC.

SHEET 1 OF 1

DWG. SIZE B

40045-566