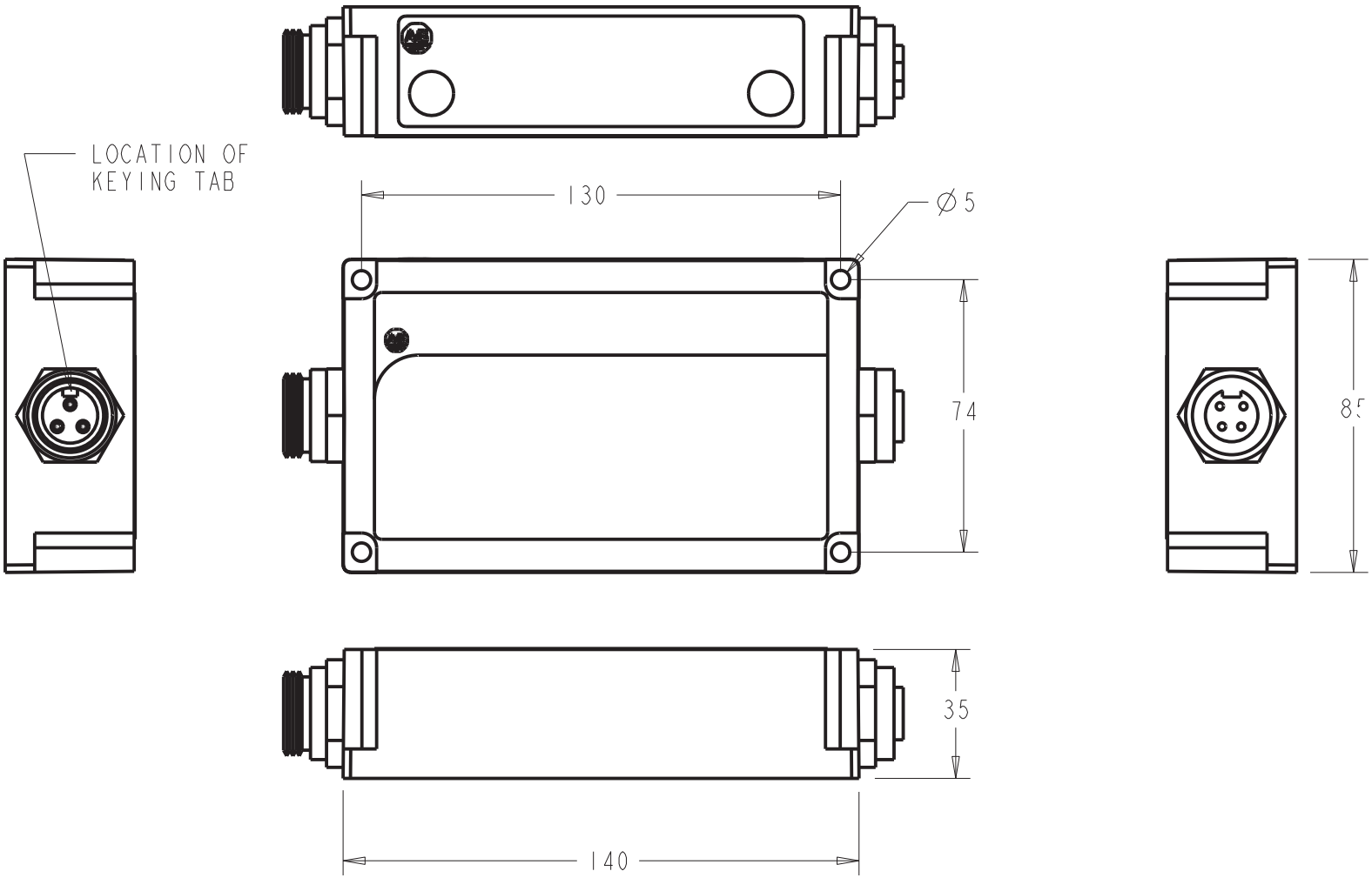
LOCATION OF
KEYING TAB
130
Ø5
74
85
35
140