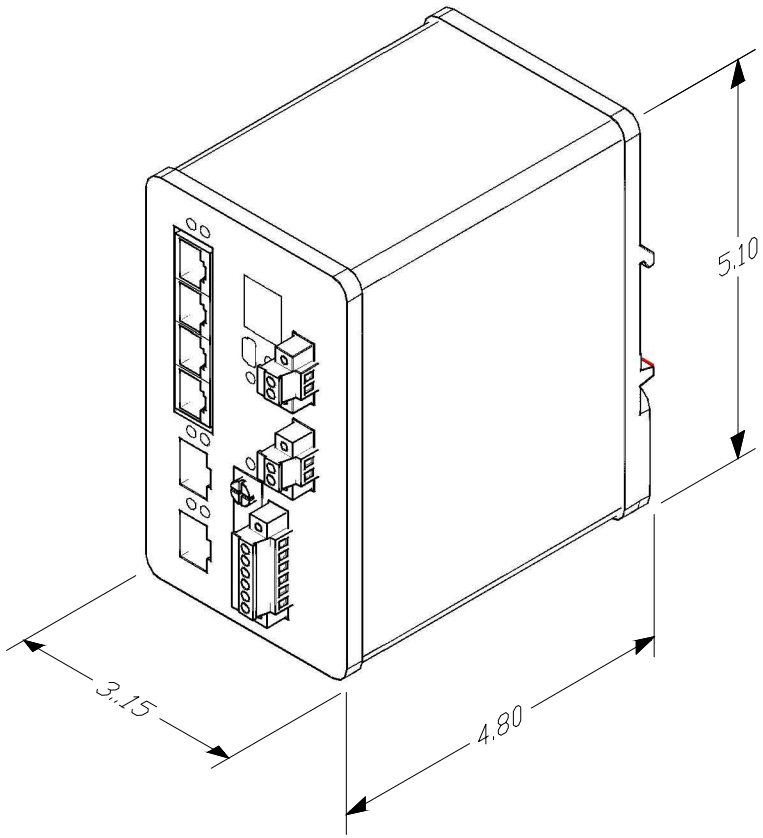1783-BMS4S2SGL