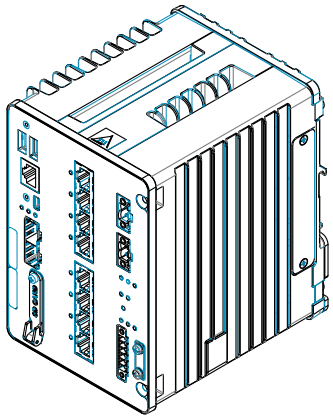

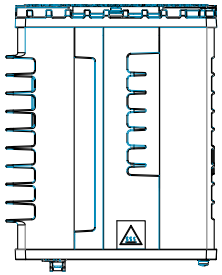

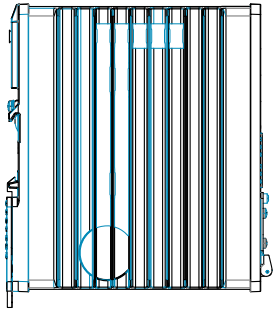

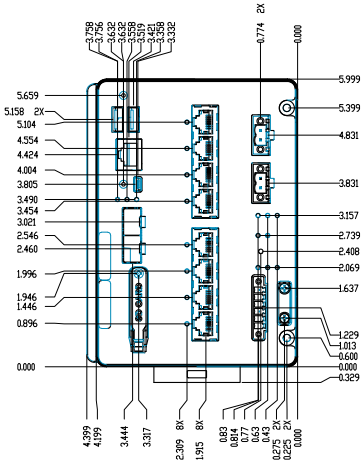

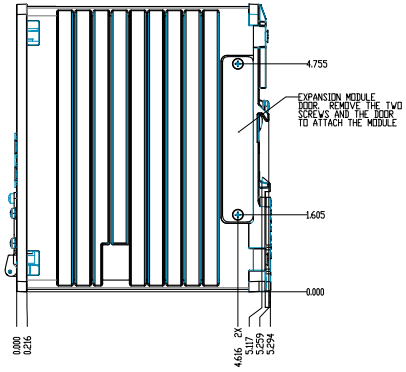

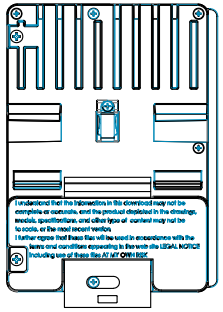

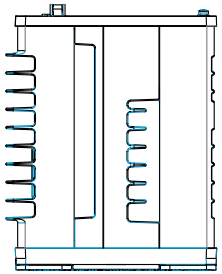

UNLESS OTHERWISE SPECIFIED DIMENSIONS ARE TO BEGIN FINISH OF PARTS. TOLERANCE ON: LINEAR IN: ANGLES IN:

PART NUMBER PN-59790

DRAW AND SCALE DRAW SCALE

DO NOT SCALE DRAWING

REVISION

	NAME	DATE		
DRAWN				
CHK'D				
ENGR				
APPR				
MFG				
Q.A.				
COMMENTS:				

REVISIONS:

VENDOR

Rockwell Automation

TITLE: STRATIX 5800 SWITCH, EXPANDABLE BASE, 0 PoE 100/1000 PORTS, 2 SFP 100/1000 SLOTS, LAYER 2 FV, ADVANCED FEATURES

DWG NO. 1783-MMS10EA

E0

SIZE

SCALE

SHEET 1 OF 1