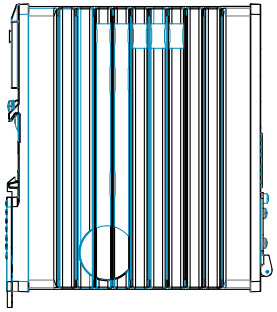

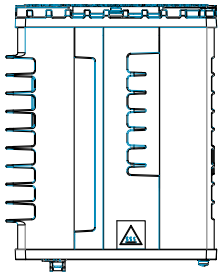

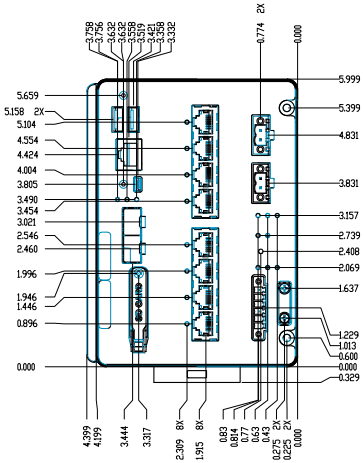

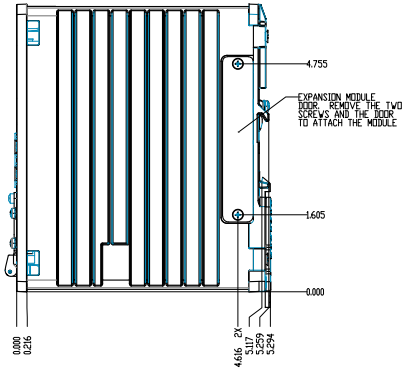

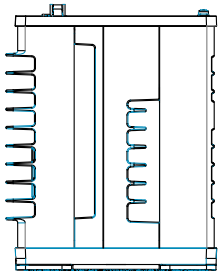

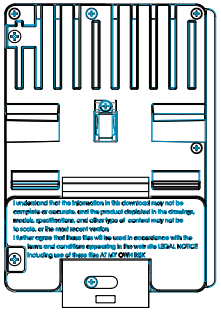

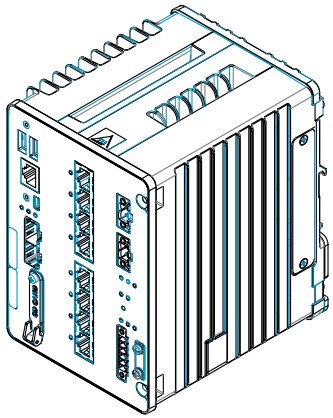

UNLESS OTHERWISE SPECIFIED DIMENSIONS ARE IN INCHES TOLERANCES: FRACTIONAL ± ANGULAR: MACH ± BEND ± TWO PLACE DECIMAL ± THREE PLACE DECIMAL ±

PART NUMBER
PN-58992

DRAWN BY
CHECK DATE
SIZE

DO NOT SCALE DRAWING

REVISION

Rockwell Automation

DRAWN			
CHECKED			
ENGRD			
TRACING			
PROJ ENG			
MFG ENG			
MATL			
APPR			
CUST			

REVISIONS

VENDOR

TITLE
STRATIX 5800 SWITCH,
EXPANDABLE BASE, 8 PoE 100/1000
PORTS, 2 SFP 100/1000 SLOTS,
LAYER 3 FV, ADVANCED FEATURES

DWG NO 1783-MMS10EAR E0

SCALE

SHEET 1 OF 1