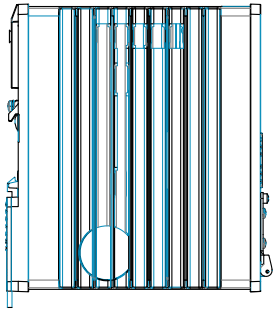

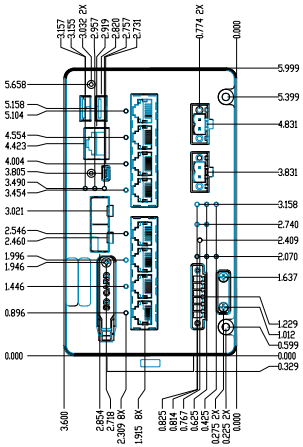

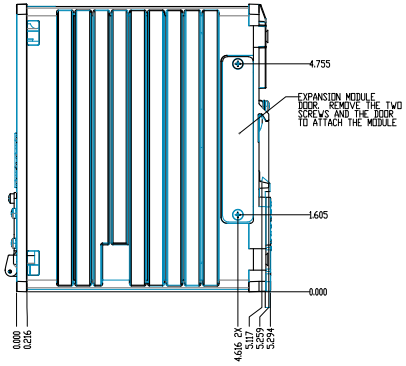

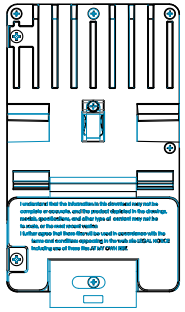

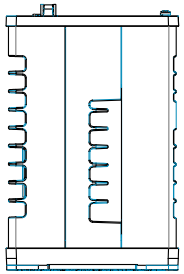

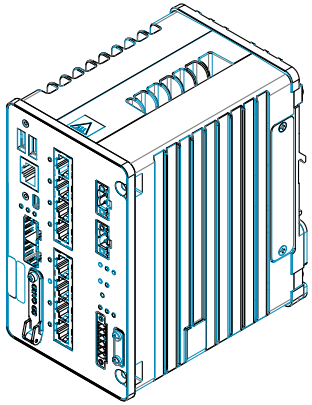

UNLESS OTHERWISE SPECIFIED DIMENSIONS ARE IN INCHES TOLERANCE ON FRACTIONS ±1/64 ANGLES ±0	PART NUMBER PN-301077				SCALE: NOT SCALE DRAWING SHEET 1 OF 1	DO NOT SCALE DRAWING REVISION
						Rockwell Automation
	NAME	DATE			TITLE:	STRATIX 5900 SWITCH, EXPANDABLE BASE, 8 COPPER 100/1000 PORTS, 2 SFP 100/1000 SLOTS, LAYER 2 FV
DRAWN						
CHECKED						
ENGRD						
APPROVED						
MFG			REVISION:		DWG NO.	1783-MMS10 L0
Q.A.						
			VENDOR		SIZE/DIM	SHEET 1 OF 1