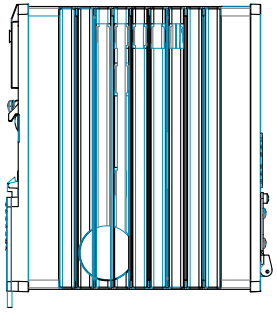

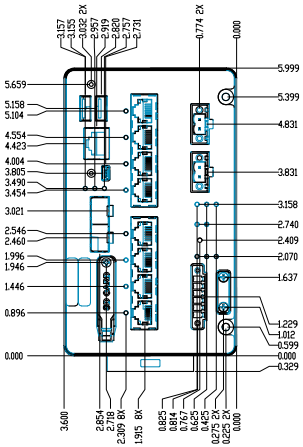

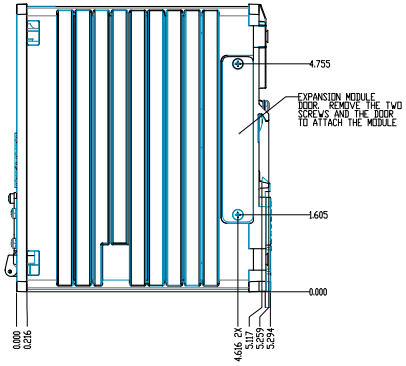

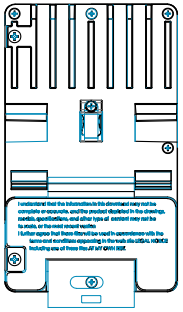

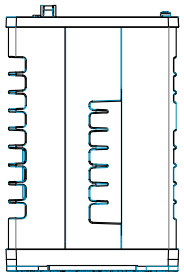

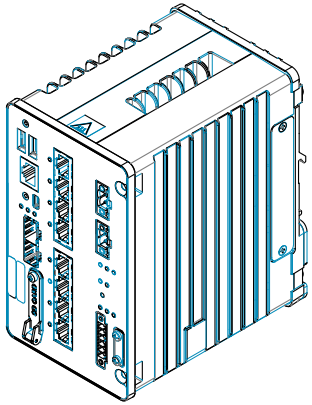

UNLESS OTHERWISE SPECIFIED DIMENSIONS ARE IN INCHES TOLERANCES ON ANGLES ±0.5DEG TWO PLACE DECIMAL ±0.010 THREE PLACE DECIMAL ±0.005

PART NUMBER
PR-000000

DRAW AND CALC SUMP
SHEET

DO NOT SCALE DRAWING

REVISION

Rockwell Automation

	NAME	DATE
DRAWN		
CHECK		
ENGR		
APPR		
MFG		
Q.A.		

TITLE: STRATIX 5900 SWITCH, EXPANDABLE BASE, 8 PoE 100/1000 PORTS, 2 SFP 100/1000 SLOTS, LAYER 3 FV

REVISION:

DWG NO. 1783-MMS10ER

G0

SIZE: A

SCALE:

SHEET 1 OF 1