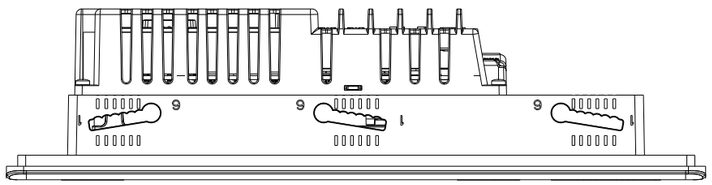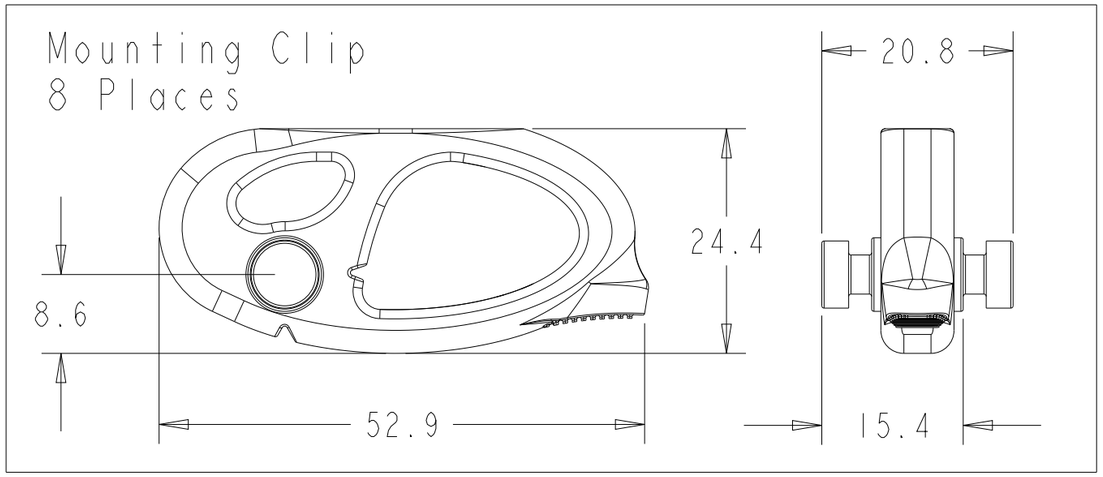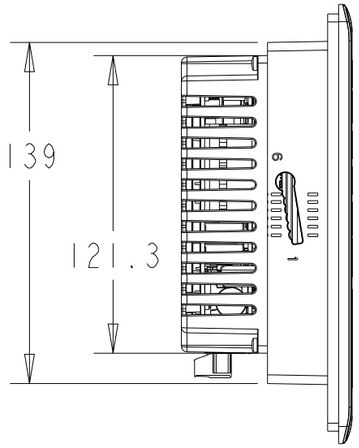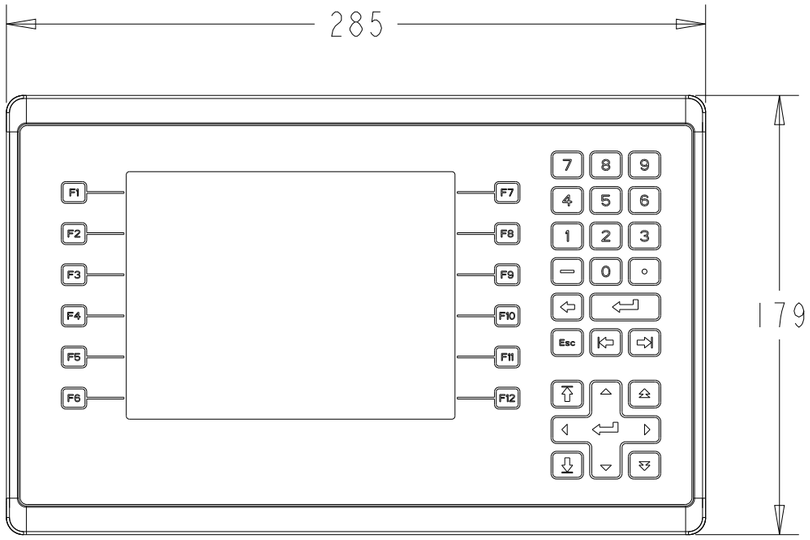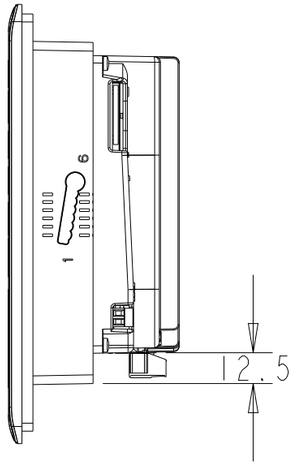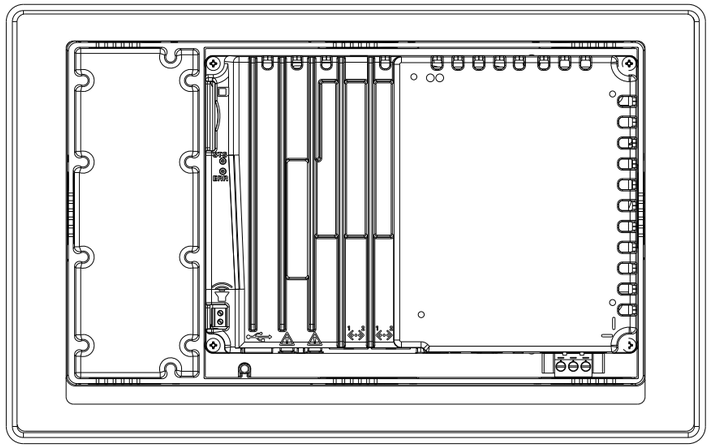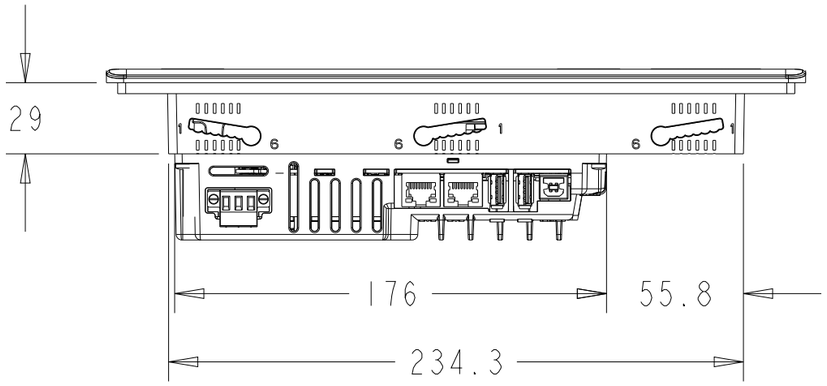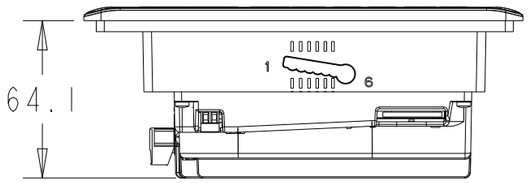PanelView Plus 7 Performance Model, 6.5 Inch Display, Keypad with Touch Screen
NOTE: All Dimensions are in mm