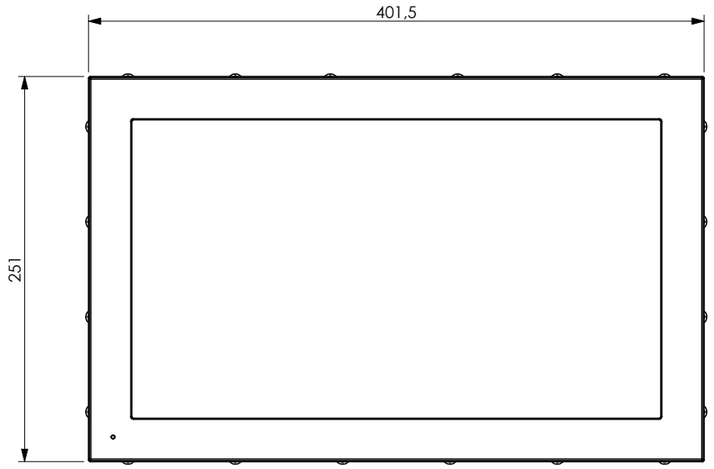

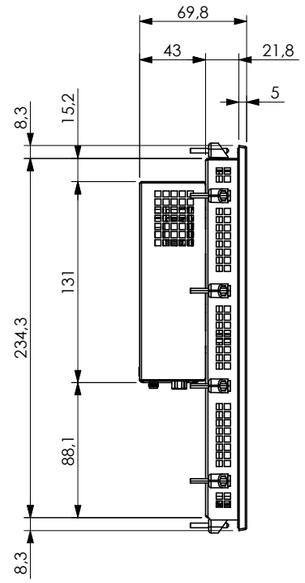

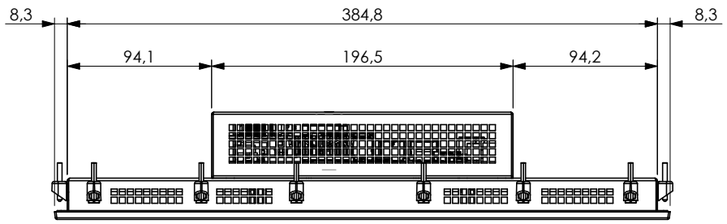

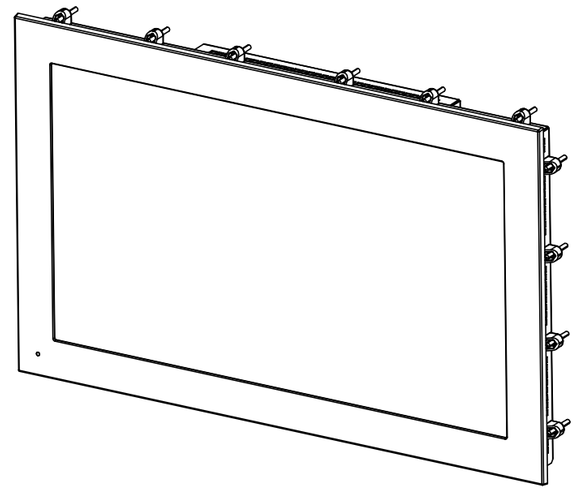

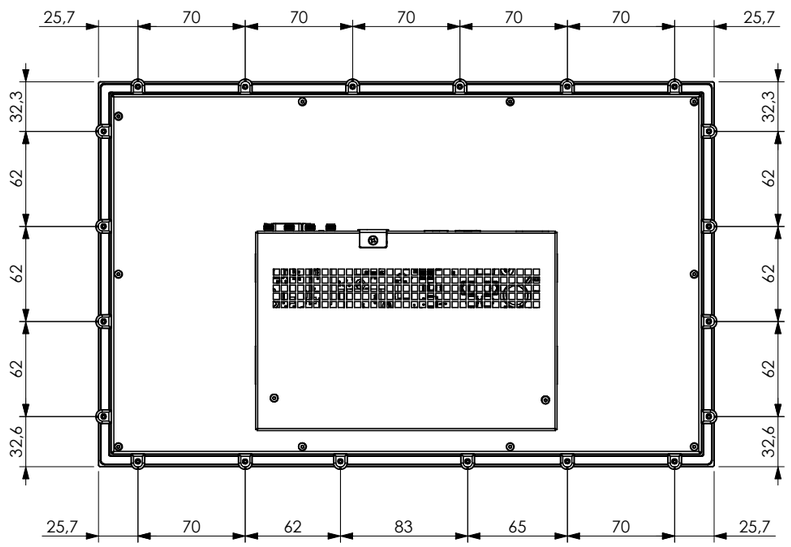

CUT-OUT DIMENSIONS = 388 x 237.5 mm