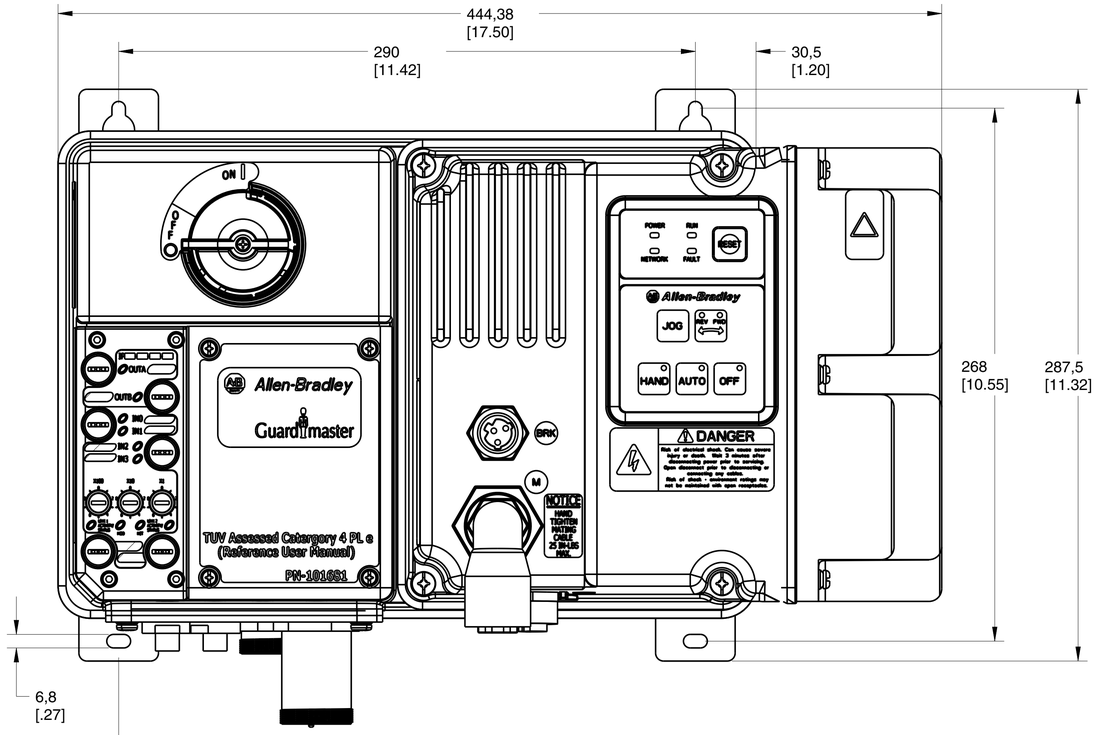
444,38
[17.50]
290
[11.42]
30,5
[1.20]
268
[10.55]
287,5
[11.32]
6,8
[.27]
ON
Allen-Bradley
Guardmaster
TÜV Assessed Category 4 PL e
(Reference User Manual)
PN-101061
POWER
RUN
NETWORK
FAULT
RESET
JOG
REV
FWD
HAND
AUTO
OFF
DANGER
NOTICE
BRK
M

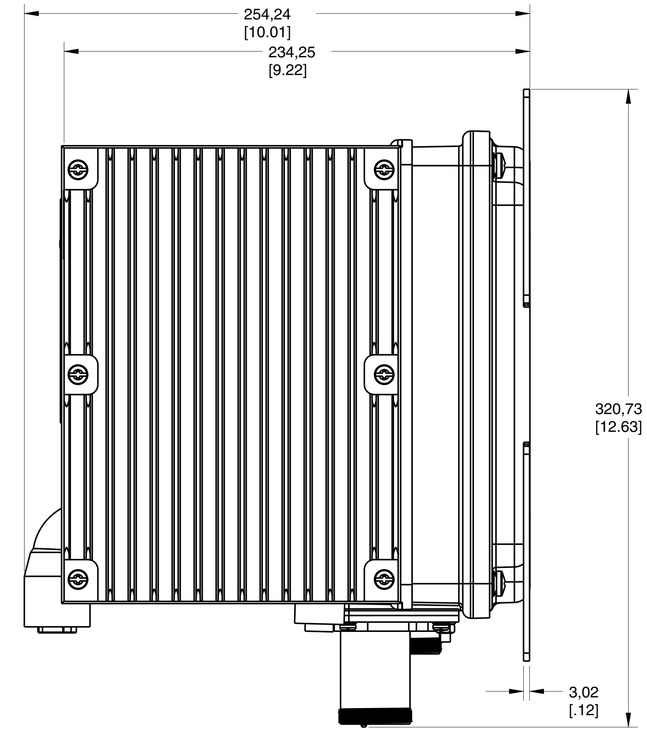
254,24
[10.01]
234,25
[9.22]
320,73
[12.63]
3,02
[.12]

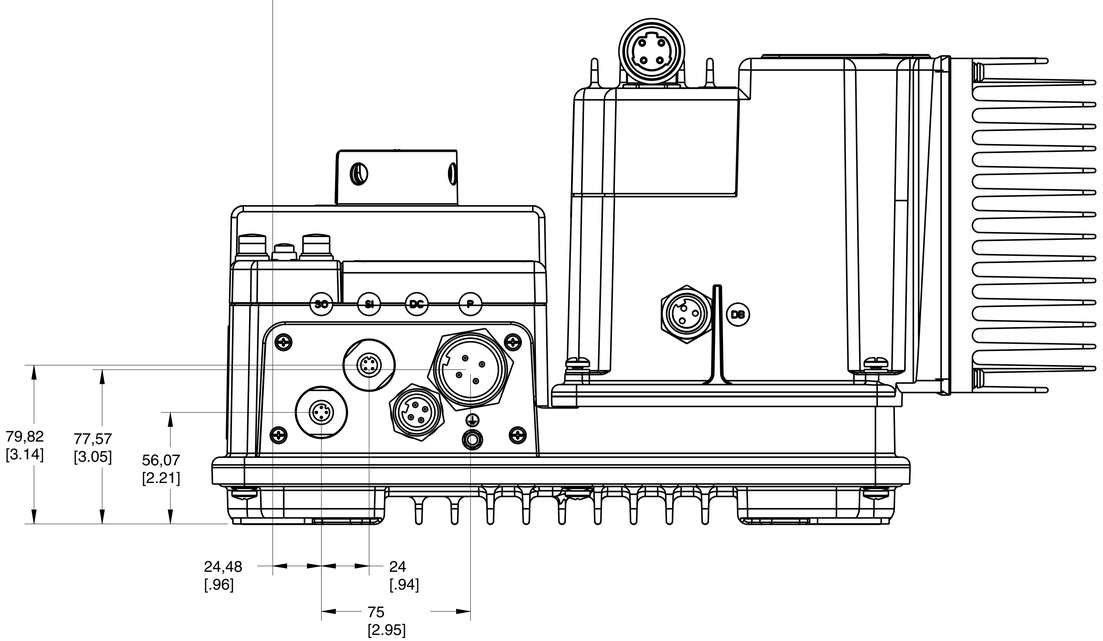
SO
SI
DC
P
DB
79,82
[3.14]
77,57
[3.05]
56,07
[2.21]
24,48
[.96]
24
[.94]
75
[2.95]

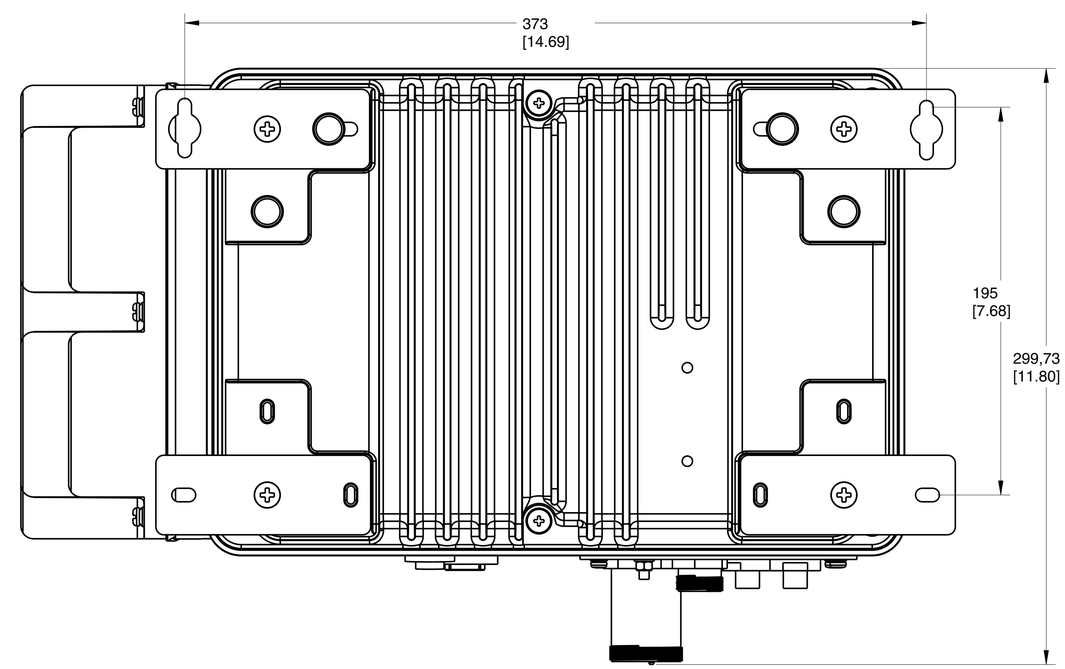
373
[14.69]
195
[7.68]
299,73
[11.80]

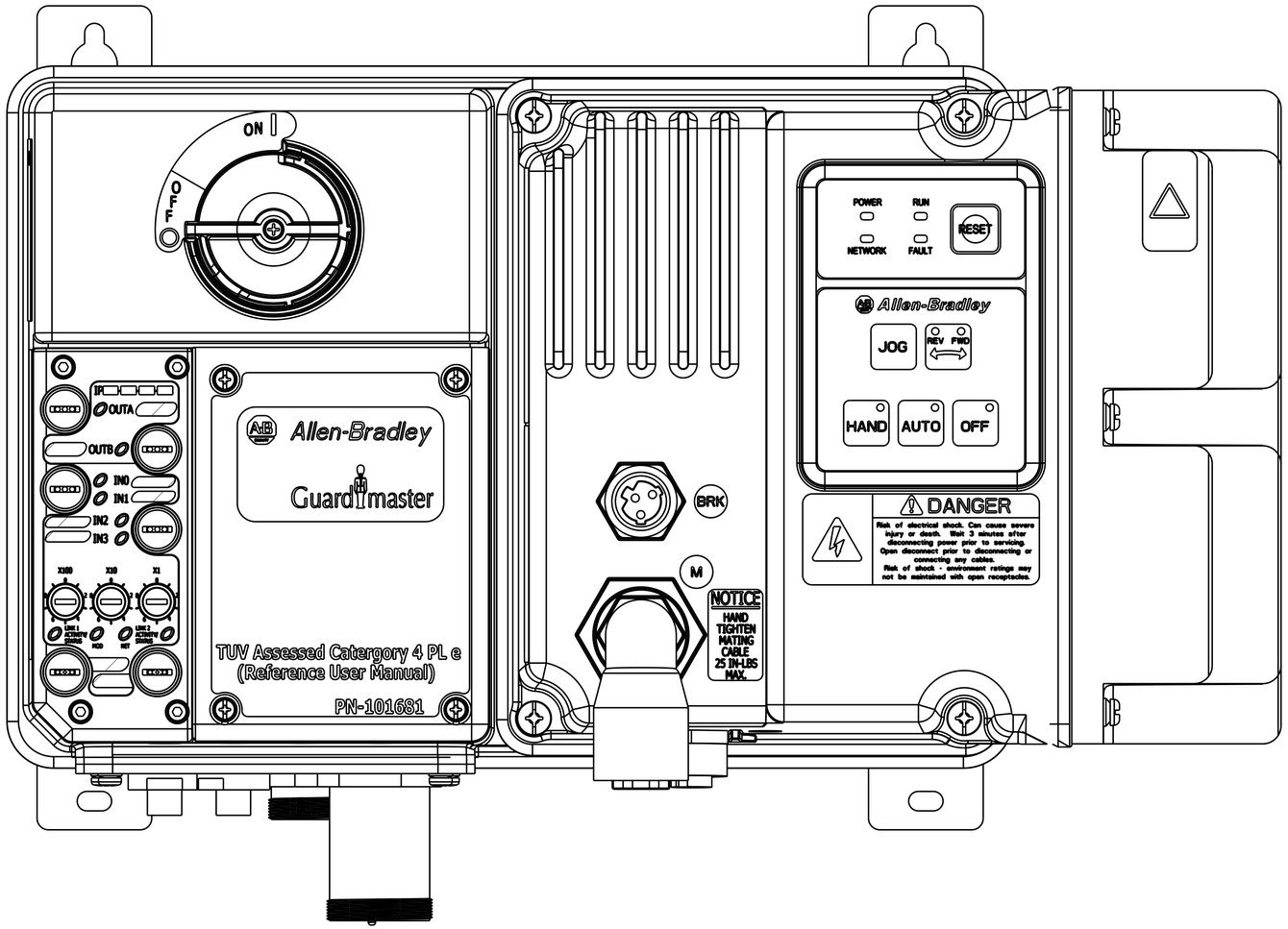
ON
OFF
IP
OUTA
OUTB
IN0
IN1
IN2
IN3
X100
X10
X1
LINK 1 ACTIVITY/ STATUS
MOD
NET
LINK 2 ACTIVITY/ STATUS
Allen-Bradley
Guardmaster
TUV Assessed Catergory 4 PL e
(Reference User Manual)
PN-101681
POWER
RUN
NETWORK
FAULT
RESET
Allen-Bradley
JOG
REV
FWD
HAND
AUTO
OFF
DANGER
Risk of electrical shock. Can cause severe injury or death. Wait 3 minutes after disconnecting power prior to servicing. Open disconnect prior to disconnecting or connecting any cables.
Risk of shock - environment ratings may not be maintained with open receptacles.
BRK
M
NOTICE
HAND TIGHTEN MATING CABLE 25 IN-LBS MAX.

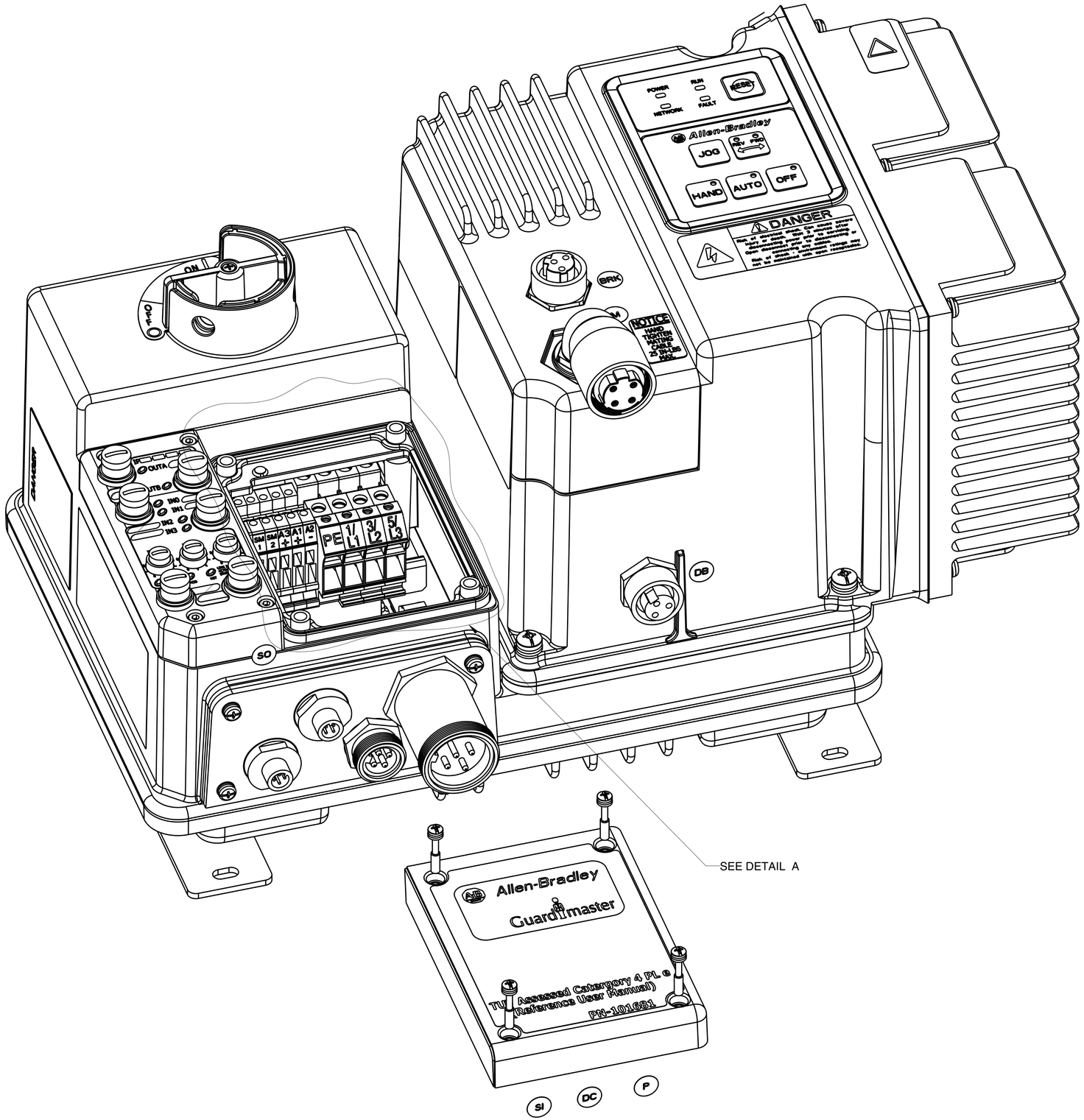
POWER
RUN
NETWORK
FAULT
RESET
Allen-Bradley
JOG
REV
FWD
HAND
AUTO
OFF
DANGER
ON
OFF
BRK
M
NOTICE
DB
SO
SM 1
SM 2
A3 +
A1 +
A2 -
PE
1/ L1
3/ L2
5/ L3
SEE DETAIL A
Allen-Bradley
Guardmaster
TÜV Assessed Category 4 PL e
Reference User Manual)
PN-101681
SI
DC
P

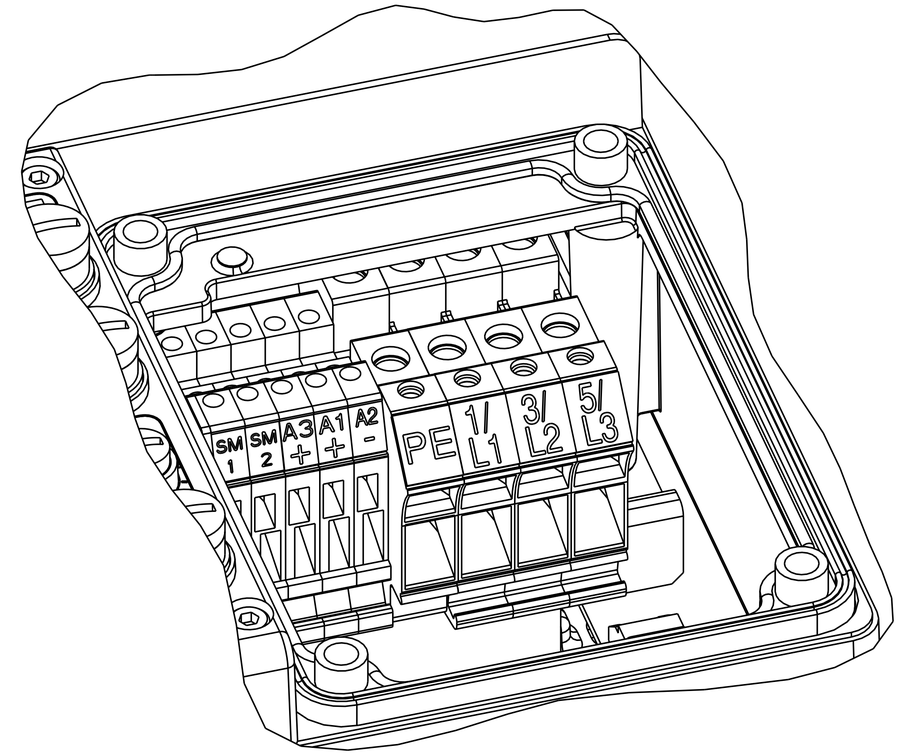
SM 1
SM 2
A3 +
A1 +
A2 -
PE
1/ L1
3/ L2
5/ L3

DETAIL A

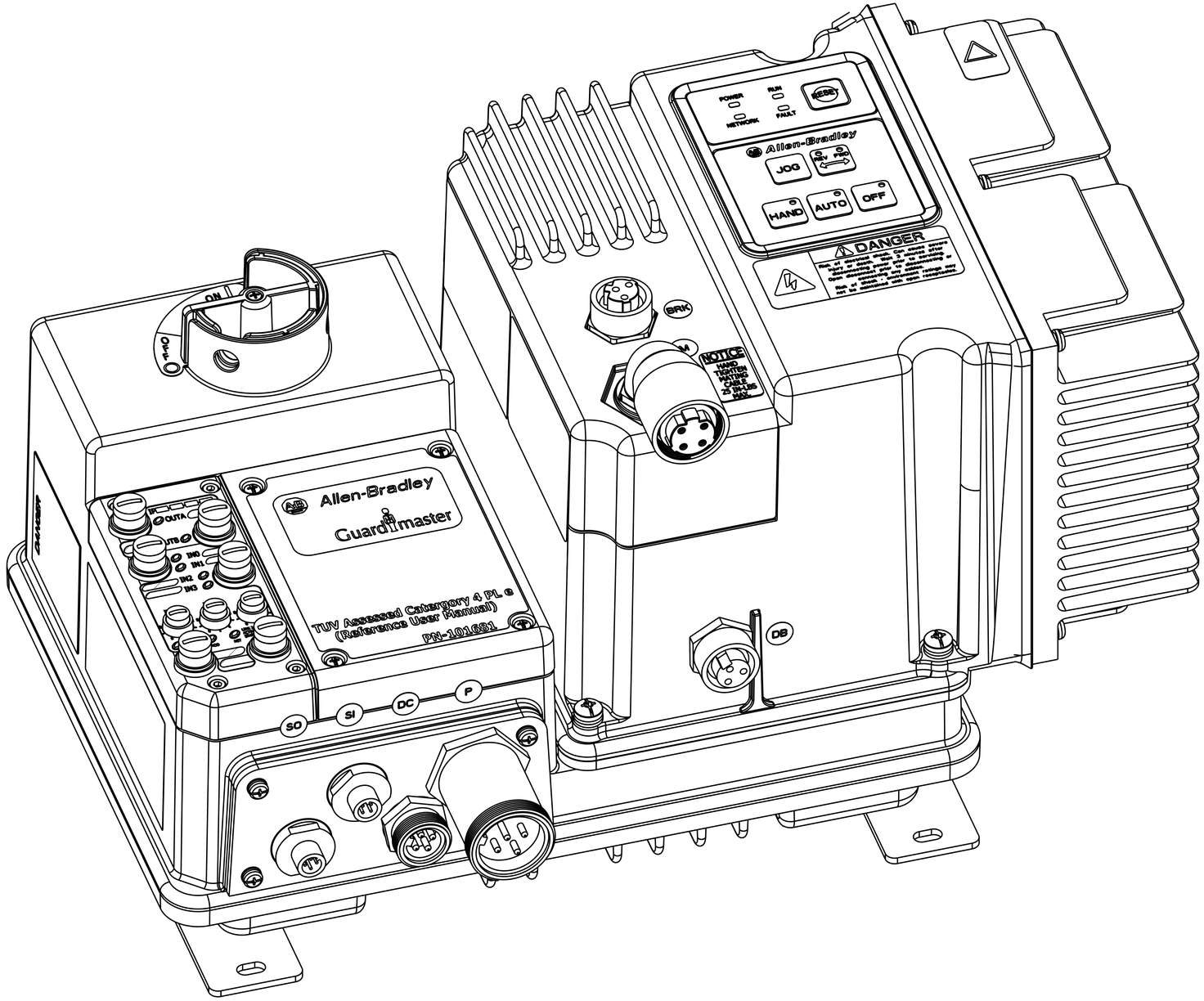
POWER
RUN
NETWORK
FAULT
RESET
Allen-Bradley
JOG
REV
FWD
HAND
AUTO
OFF
DANGER
BRK
NOTICE
HAND TIGHTEN PINTRIS CABLE 25 IN-LBS MAX.
ON
OFF
Allen-Bradley
Guardmaster
OUT A
IN0
IN1
IN2
IN3
TUV Assessed Category 4 PL e
(Reference User Manual)
PN-101691
SO
SI
DC
P
DS