CONFIDENTIAL - PROPRIETARY

"THIS DRAWING AND SPECIFICATION, HEREIN, ARE THE PROPERTY OF ASEM SpA AND MUST NOT BE REPRODUCED OR COPIED OR USED IN WHOLE OR IN PART AS THE BASIS FOR THE MANUFACTURE OR SALE OF ITEMS WHITOUT WRITTEN PERMISSION"

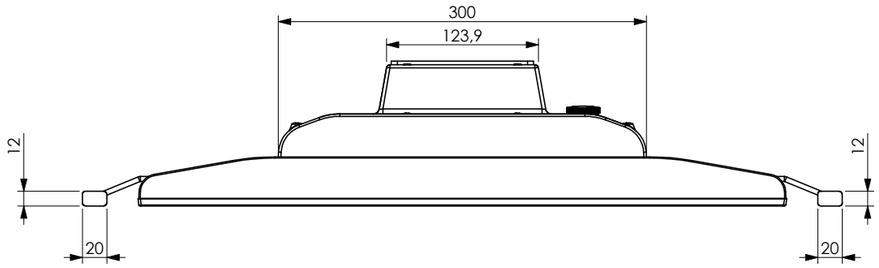

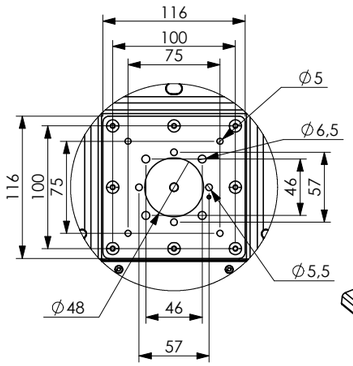

DETTAGLIO A

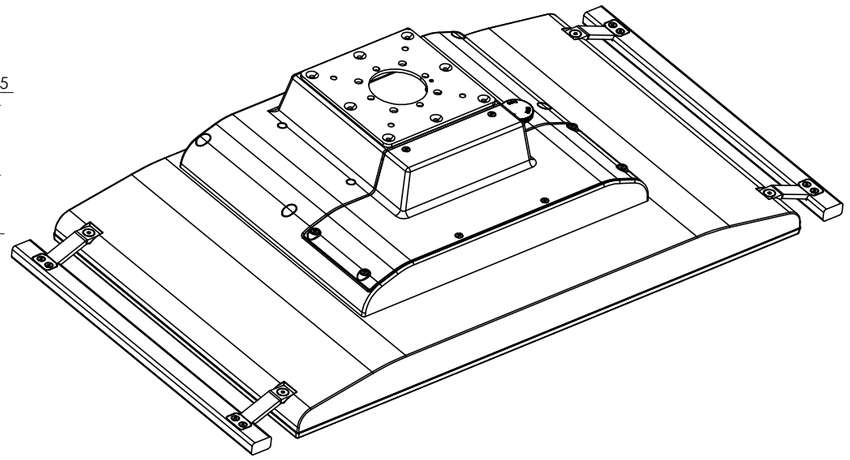

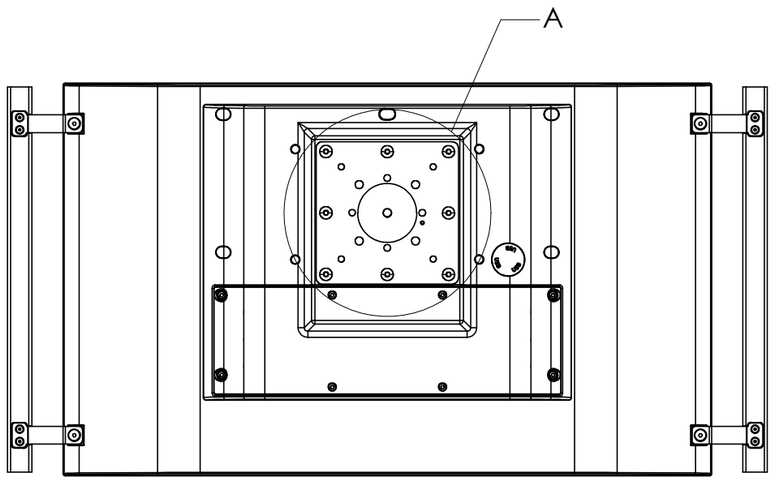

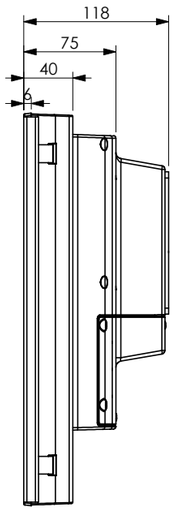

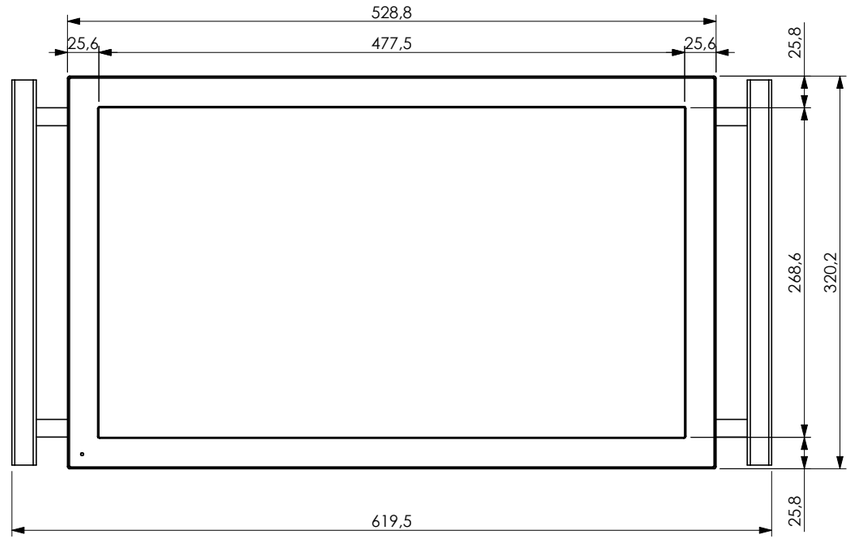

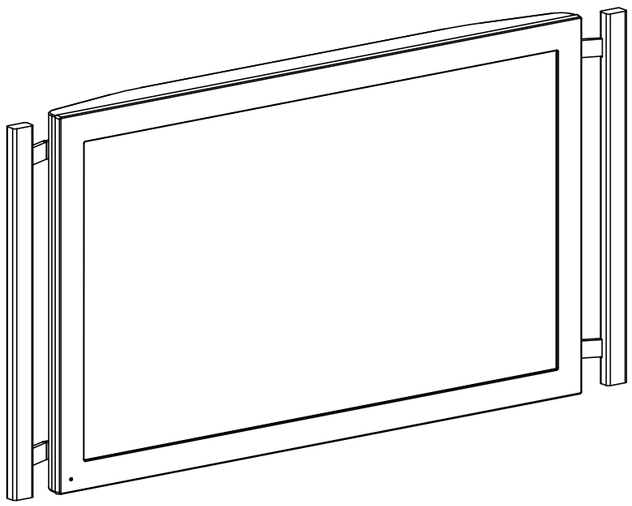

NOTE:
- ACCURATE TRIM REQUESTED
- BENDING RADIUS: MINIMUN POSSIBLE
- PERPENDICULAR AND PARALLEL GEOMETRIC TOLERANCE: MEDIUM (Max ˜0.3 mm) ON ALL DIRECTIONS
- THE DIMENSIONS INCLUDING THE TREATMENT

SHORT SIDE	>3 <6	>6 <30	>30 <120	>120
ANGULAR COMMON TOLERANCE	˜1 ±	˜30 '	˜20 '	˜10 '

QUALITY	<6	>6 <30	>30 <120	>120 <315	>315 <1000	>1000 <2000	>2000 <4000	>4000
COARSE	˜0.2	˜0.5	˜0.8	˜1.2	˜2	˜3	˜4	˜5
MEDIUM	˜0.1	˜0.2	˜0.3	˜0.5	˜0.8	˜1.2	˜2	˜3
ACCURATE	˜0.05	˜0.1	˜0.15	˜0.2	˜0.3	˜0.5		

COMMON TOLERANCE

MATERIAL			THICKNESS mm	MODIFICATION N°	DATE	
TREATMENT					SIGNATURE	
ASEM		1st DRAW	DESIGN	CHECKED	TOLERANCE MEDIUM	SCALE 1:5
	DATE	22/06/2022			NOT QUOTED BEVELS 2x45°	UNIT mm / SHEET 1 of 9
	SIGNATURE	Dereani			NOT QUOTED RADIUS R2	
TITLE DIMA VK3500 / MK200 21,5 VESA RESISTIVO CON MANIGLIE						
DRAWING N° 00_d18201909				RELEASE A	LEVEL 00	SIZE A3

CONFIDENTIAL - PROPRIETARY

"THIS DRAWING AND SPECIFICATION, HEREIN, ARE THE PROPERTY OF ASEM SpA AND MUST NOT BE REPRODUCED OR COPIED OR USED IN WHOLE OR IN PART AS THE BASIS FOR THE MANUFACTURE OR SALE OF ITEMS WHITOUT WRITTEN PERMISSION"

NOTE:
- ACCURATE TRIM REQUESTED
- BENDING RADIUS: MINIMUN POSSIBLE
- PERPENDICULAR AND PARALLEL GEOMETRIC TOLERANCE: MEDIUM (Max ˋ0.3 mm) ON ALL DIRECTIONS
- THE DIMENSIONS INCLUDING THE TREATMENT

SHORT SIDE	>3 <6	>6 <30	>30 <120	>120
ANGULAR COMMON TOLERANCE	ˋ1±	ˋ30 '	ˋ20 '	ˋ10 '

COMMON TOLERANCE / QUALITY	<6	>6 <30	>30 <120	>120 <315	>315 <1000	>1000 <2000	>2000 <4000	>4000
COARSE	ˋ0.2	ˋ0.5	ˋ0.8	ˋ1.2	ˋ2	ˋ3	ˋ4	ˋ5
MEDIUM	ˋ0.1	ˋ0.2	ˋ0.3	ˋ0.5	ˋ0.8	ˋ1.2	ˋ2	ˋ3
ACCURATE	ˋ0.05	ˋ0.1	ˋ0.15	ˋ0.2	ˋ0.3	ˋ0.5		

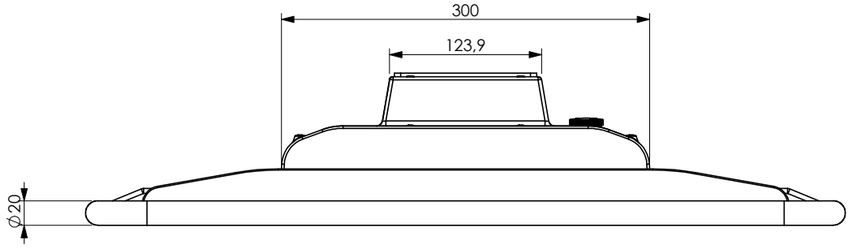

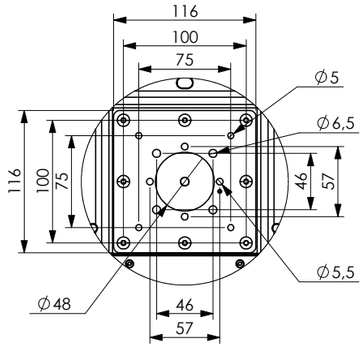

DETTAGLIO A

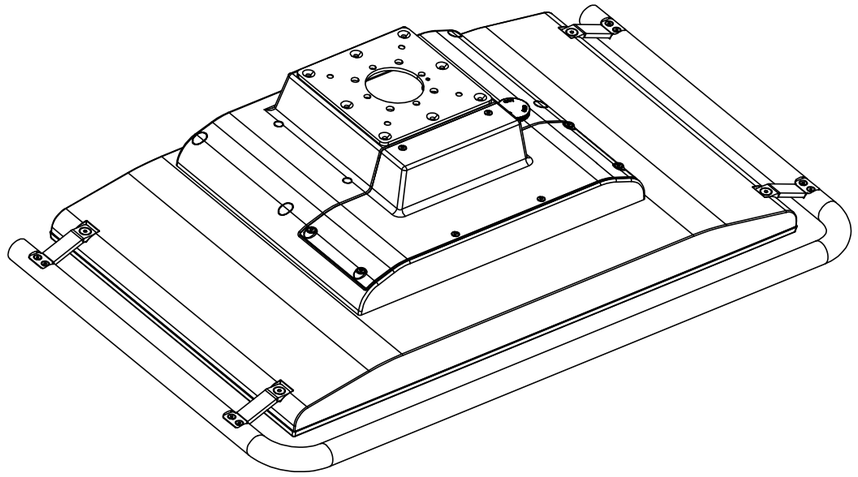

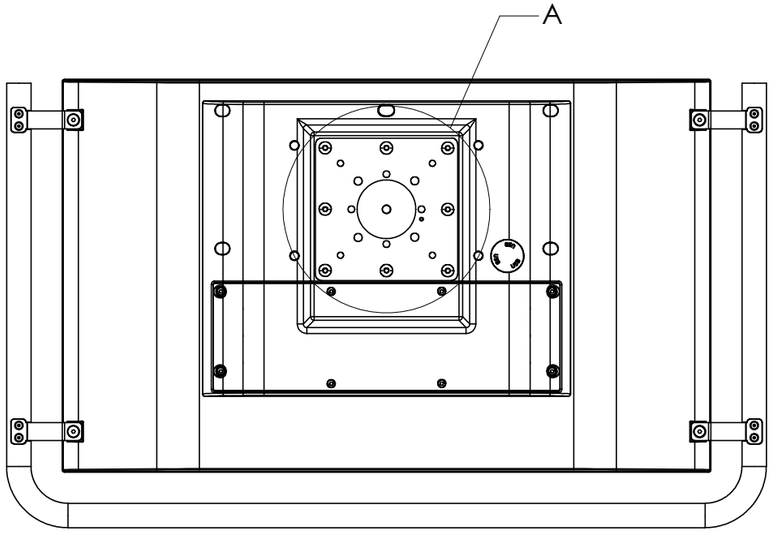

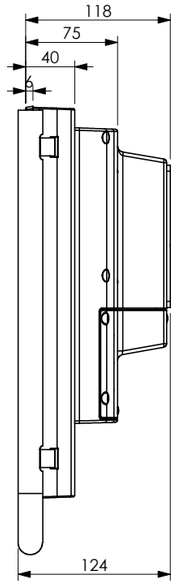

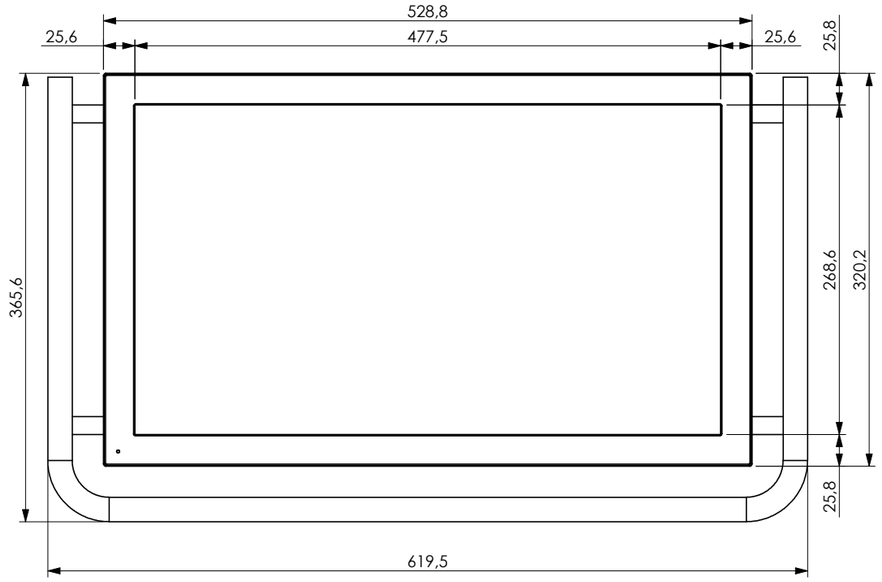

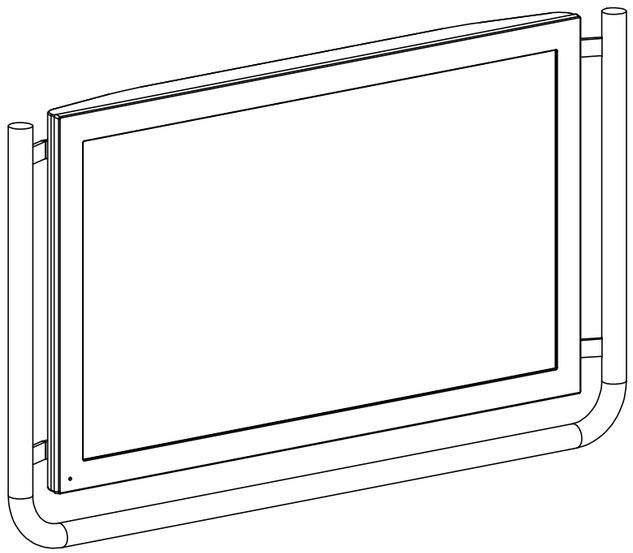

MATERIAL			THICKNESS mm	MODIFICATION N°	DATE
TREATMENT					SIGNATURE
ASEM		1st DRAW	DESIGN	CHECKED	TOLERANCE: MEDIUM; SCALE: 1:5
	DATE	22/06/2022			NOT QUOTED BEVELS: 2x45°; UNIT: mm; SHEET: 2 of 9
	SIGNATURE	Dereani			NOT QUOTED RADIUS: R2

TITLE: DIMA VK3500 / MK200 21,5 VESA RESISTIVO CON MANIGLIONE

DRAWING N°	RELEASE	LEVEL	SIZE
00_d18201909	A	00	A3

CONFIDENTIAL - PROPRIETARY

"THIS DRAWING AND SPECIFICATION, HEREIN, ARE THE PROPERTY OF ASEM SpA AND MUST NOT BE REPRODUCED OR COPIED OR USED IN WHOLE OR IN PART AS THE BASIS FOR THE MANUFACTURE OR SALE OF ITEMS WHITOUT WRITTEN PERMISSION"

NOTE:
- ACCURATE TRIM REQUESTED
- BENDING RADIUS: MINIMUN POSSIBLE
- PERPENDICULAR AND PARALLEL GEOMETRIC TOLERANCE: MEDIUM (Max ˋ0.3 mm) ON ALL DIRECTIONS
- THE DIMENSIONS INCLUDING THE TREATMENT

SHORT SIDE	>3 <6	>6 <30	>30 <120	>120
ANGULAR COMMON TOLERANCE	ˋ1±	ˋ30 '	ˋ20 '	ˋ10 '

QUALITY	<6	>6 <30	>30 <120	>120 <315	>315 <1000	>1000 <2000	>2000 <4000	>4000
COARSE	ˋ0.2	ˋ0.5	ˋ0.8	ˋ1.2	ˋ2	ˋ3	ˋ4	ˋ5
MEDIUM	ˋ0.1	ˋ0.2	ˋ0.3	ˋ0.5	ˋ0.8	ˋ1.2	ˋ2	ˋ3
ACCURATE	ˋ0.05	ˋ0.1	ˋ0.15	ˋ0.2	ˋ0.3	ˋ0.5	ˋ0.2	

COMMON TOLERANCE

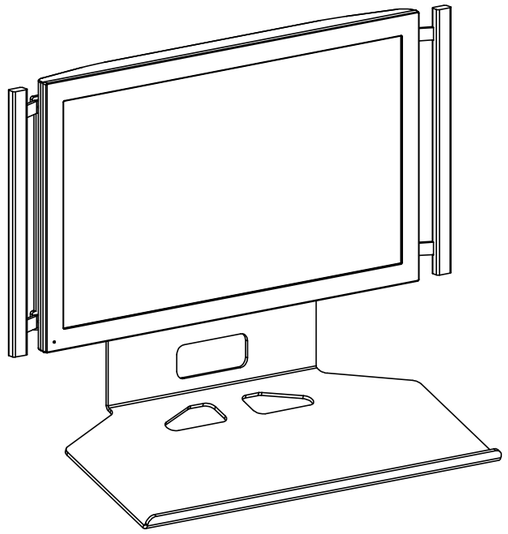

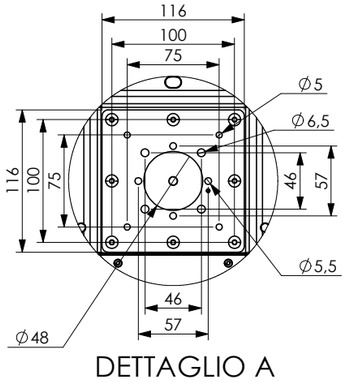

DETTAGLIO A

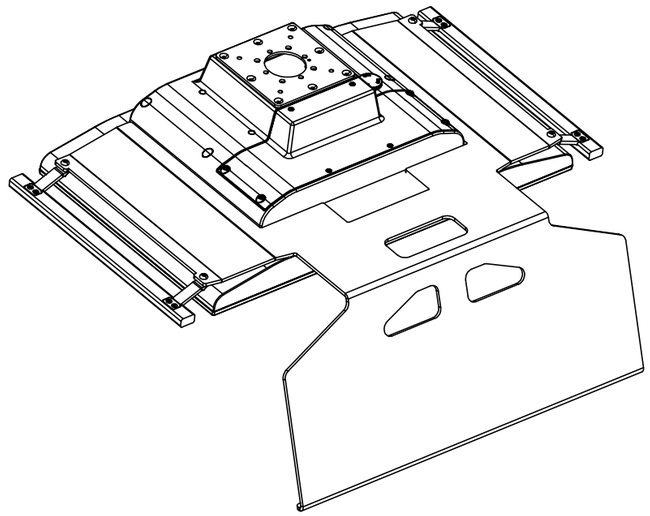

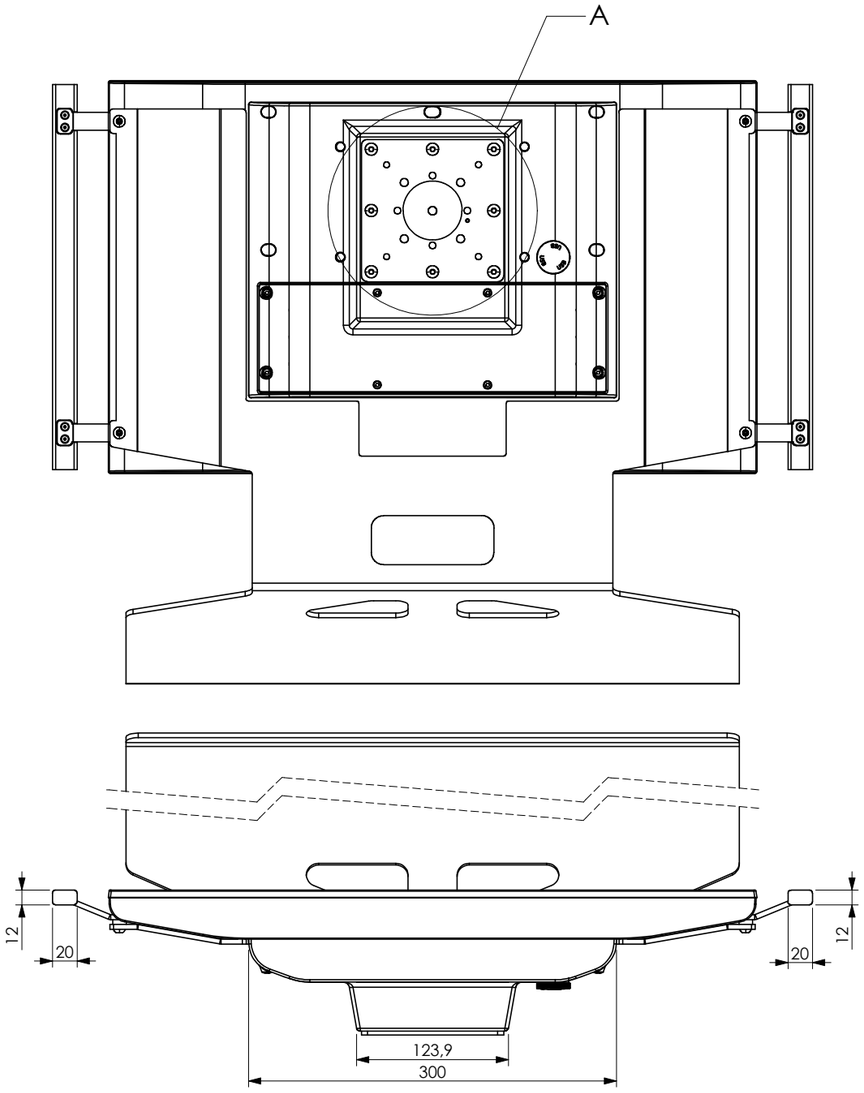

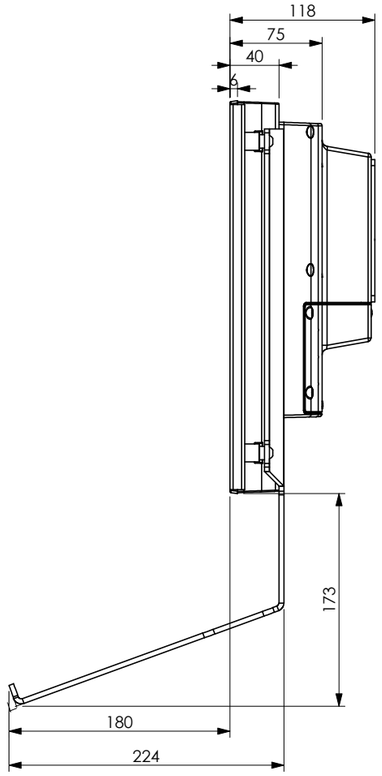

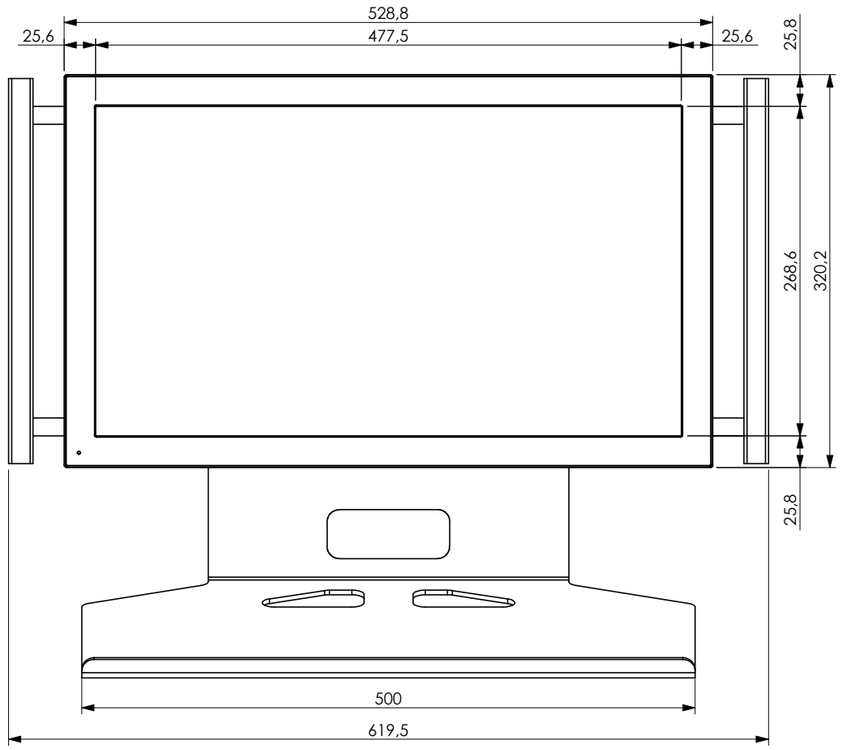

MATERIAL			THICKNESS mm	MODIFICATION N°	DATE
TREATMENT					SIGNATURE
ASEM		1st DRAW	DESIGN	CHECKED	TOLERANCE MEDIUM / SCALE 1:5
	DATE	22/06/2022			NOT QUOTED BEVELS 2x45° / UNIT mm / SHEET 3 of 9
	SIGNATURE	Dereani			NOT QUOTED RADIUS R2

TITLE
DIMA VK3500 / MK200 21,5 VESA RESISTIVO CON MANIGLIE E VASSOIO PORTA TASTIERA

DRAWING N°	RELEASE	LEVEL	SIZE
00_d18201909	A	00	A3