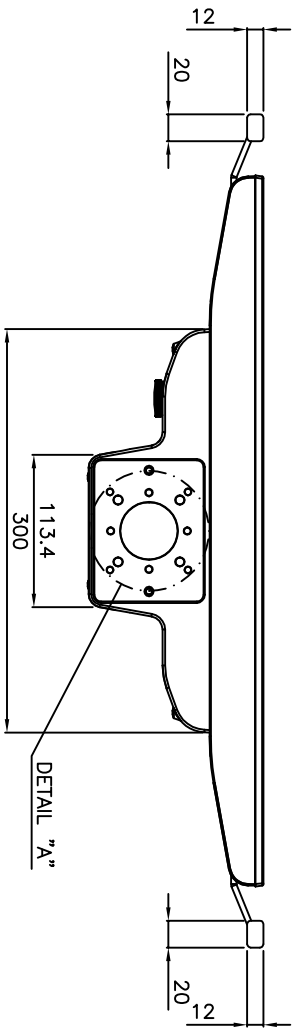
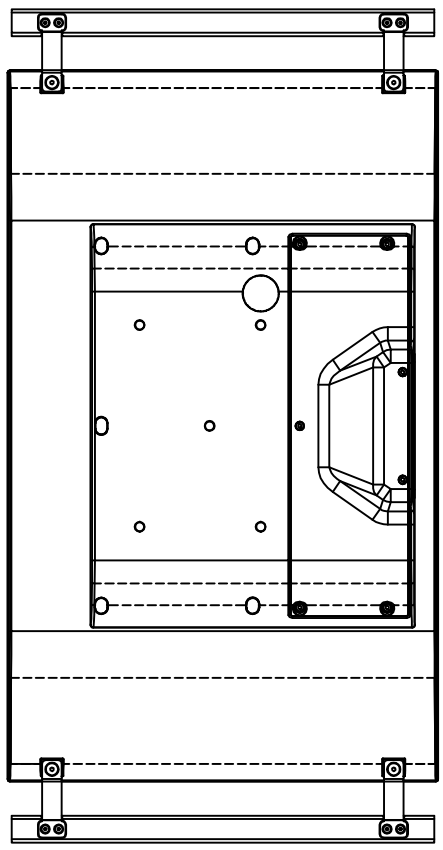
COMMON TOLERANCE	QUALITY	<6	>6 ≤30	>30 ≤120	>120 ≤315	>315 ≤1000	>1000 ≤2000	>2000 ≤4000	>4000
	COARSE	±0.2	±0.5	±0.8	±1.2	±2	±3	±4	±5
	MEDIUM	±0.1	±0.2	±0.3	±0.5	±0.8	±1.2	±2	±3
	ACCURATE	±0.05	±0.1	±0.15	±0.2	±0.3	±0.5		

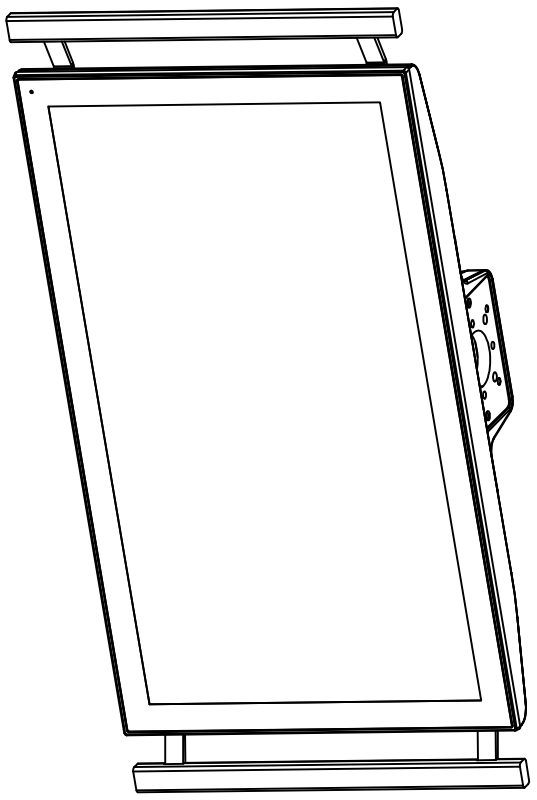
SHORT SIDE	>3 ≤6	>6 ≤30	>30 ≤120	>120
ANGULAR COMMON TOLERANCE	±1°	±30'	±20'	±10'

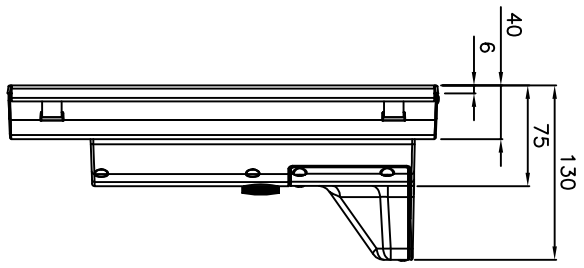
CONFIDENTIAL–PROPRIETARY

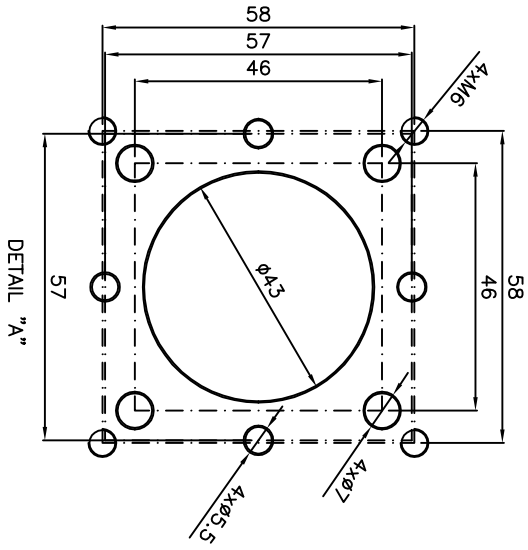
"THIS DRAWING AND SPECIFICATIONS, HEREIN, ARE THE PROPERTY OF ASEM SpA AND MUST NOT BE REPRODUCED OR COPIED OR USED IN WHOLE OR IN PART AS THE BASIS FOR THE MANUFACTURE OR SALE OF ITEMS WITHOUT WRITTEN PERMISSION."

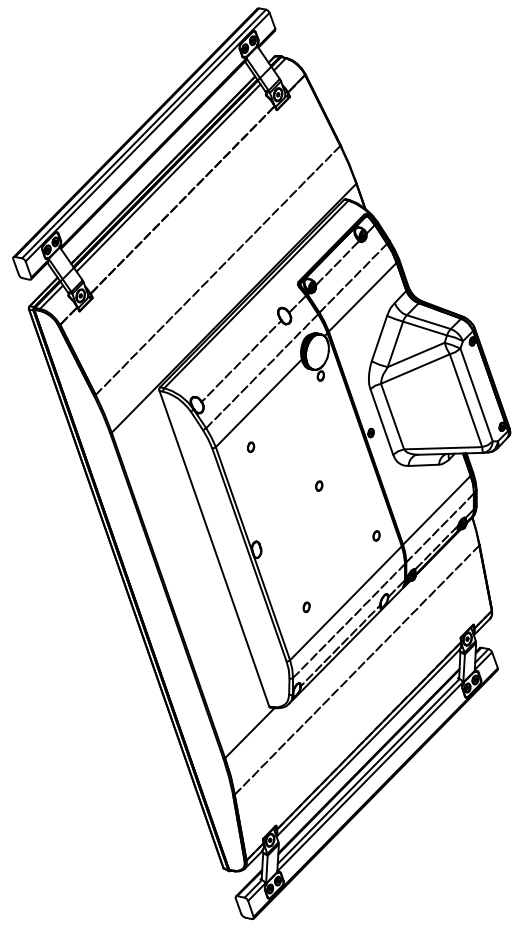












NOT QUOTED BEVELS	MATERIAL	TREATMENT
/	/	/

MODIFICATION			
MOD. N°	DATE	SIGNATURE	

Industria Informatica

	SIGNATURE	DATE
1st DRAW	ROMANO	25.08.21
DESIGN	ROMANO	25.08.21
CHECKED		

TOLERANCE	REPLACES	DATE
MEDIUM	REPLACED BY	SIGN.
		DATE
		SIGN.

SCALE	UNIT	SHEET	OF
/	MM	1	3

TITLE DIMA VK3500 21.5" TOP ARM

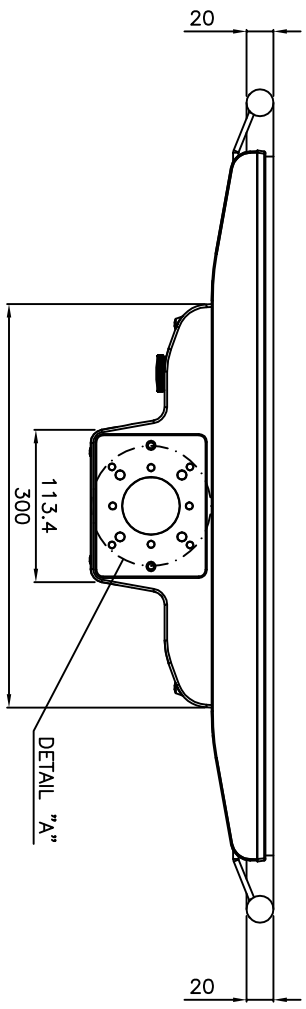
DRAWING N°	RELEASE	LEVEL
DIMA_VK3500_215_TOP	A	00

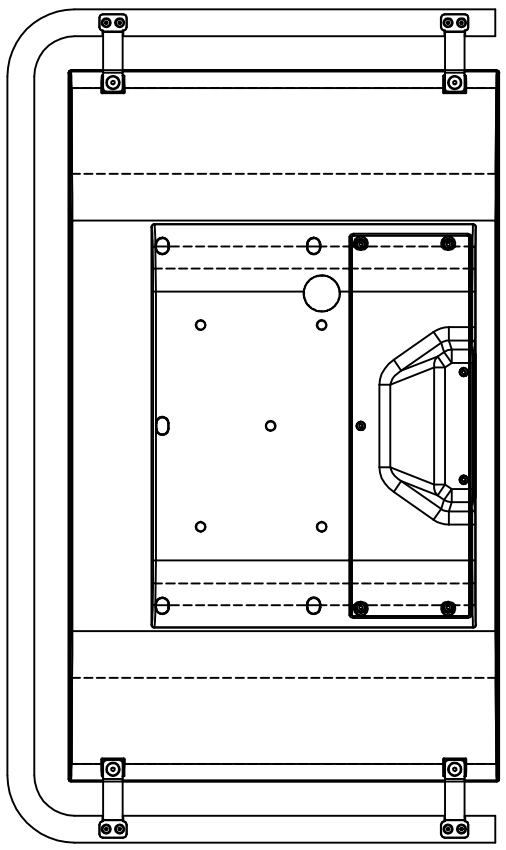
	QUALITY	<6	>6 ≤30	>30 ≤120	>120 ≤315	>315 ≤1000	>1000 ≤2000	>2000 ≤4000	>4000
COMMON TOLERANCE	COARSE	±0.2	±0.5	±0.8	±1.2	±2	±3	±4	±5
	MEDIUM	±0.1	±0.2	±0.3	±0.5	±0.8	±1.2	±2	±3
	ACCURATE	±0.05	±0.1	±0.15	±0.2	±0.3	±0.5		

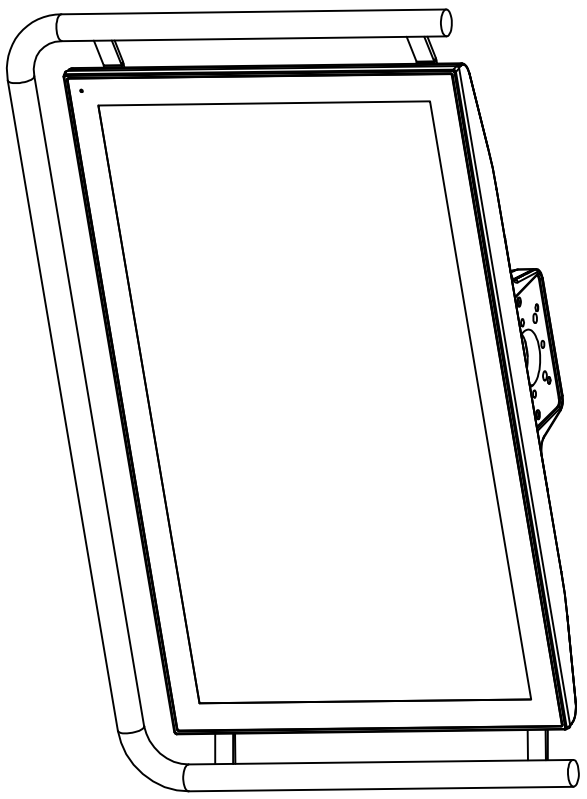
SHORT SIDE	>3 ≤6	>6 ≤30	>30 ≤120	>120
ANGULAR COMMON TOLERANCE	±1°	±30'	±20'	±10'

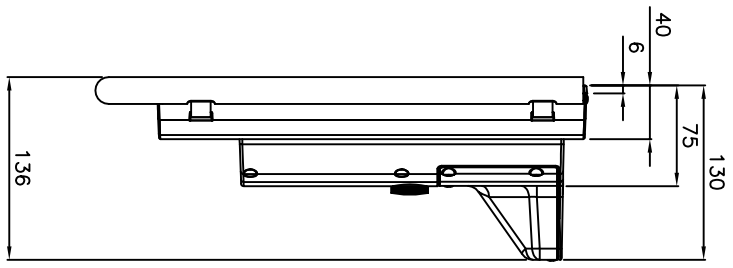
CONFIDENTIAL–PROPRIETARY

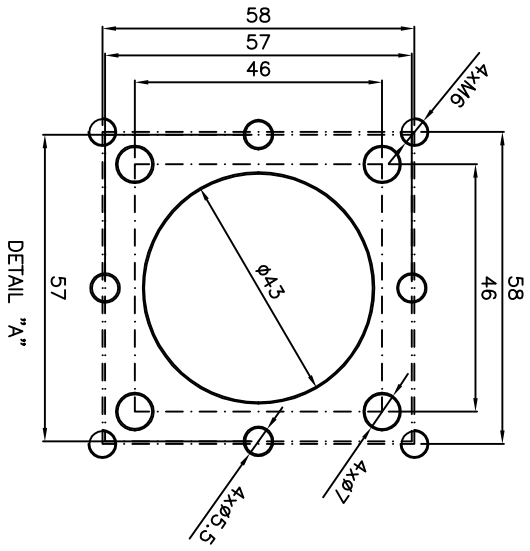
"THIS DRAWING AND SPECIFICATIONS, HEREIN, ARE THE PROPERTY OF ASEM SpA AND MUST NOT BE REPRODUCED OR COPIED OR USED IN WHOLE OR IN PART AS THE BASIS FOR THE MANUFACTURE OR SALE OF ITEMS WITHOUT WRITTEN PERMISSION."

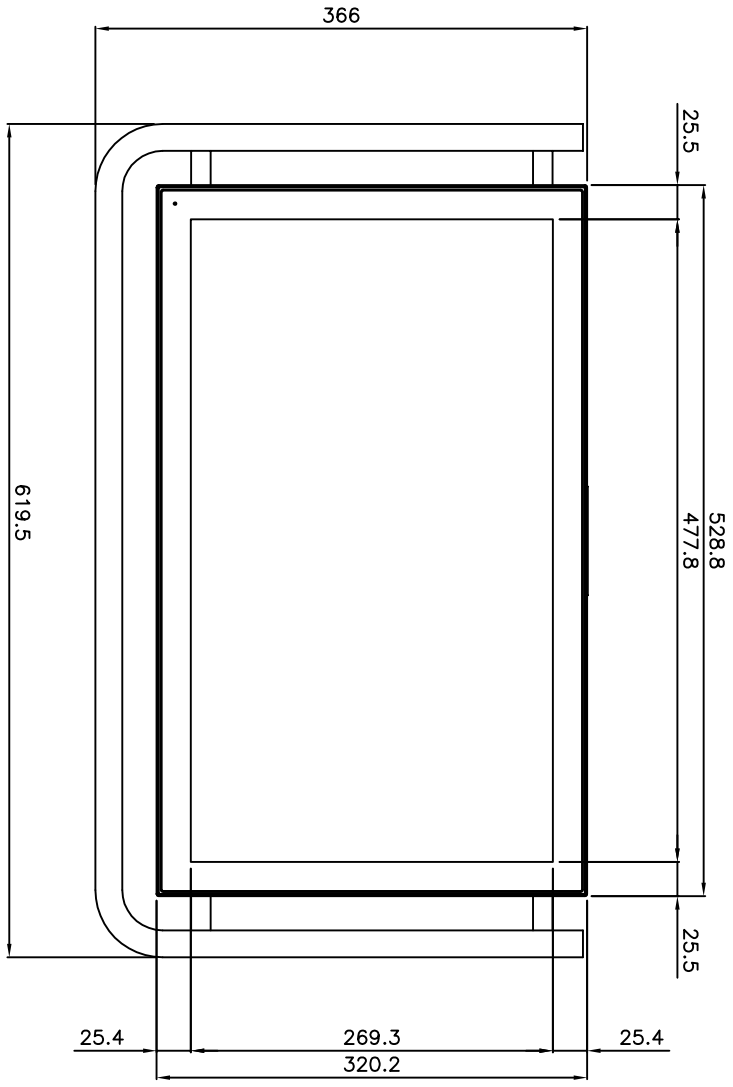


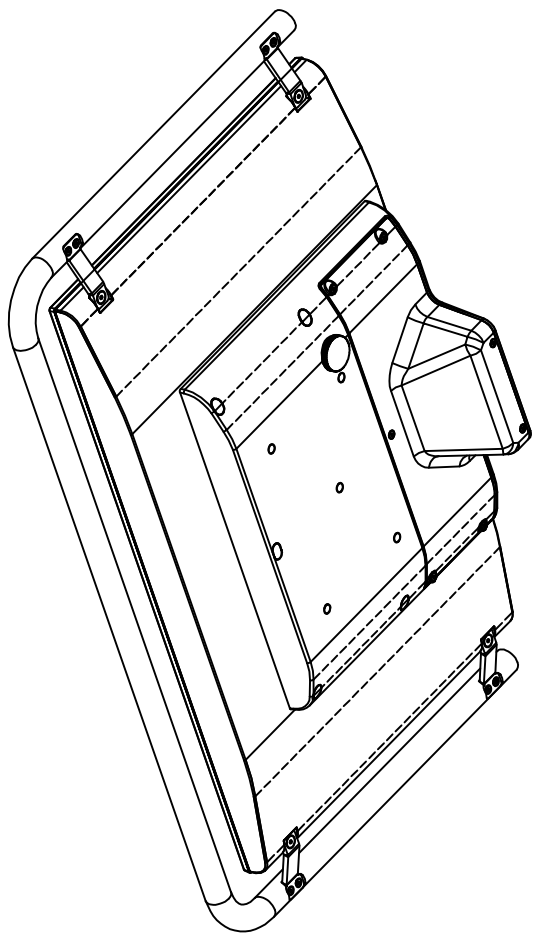












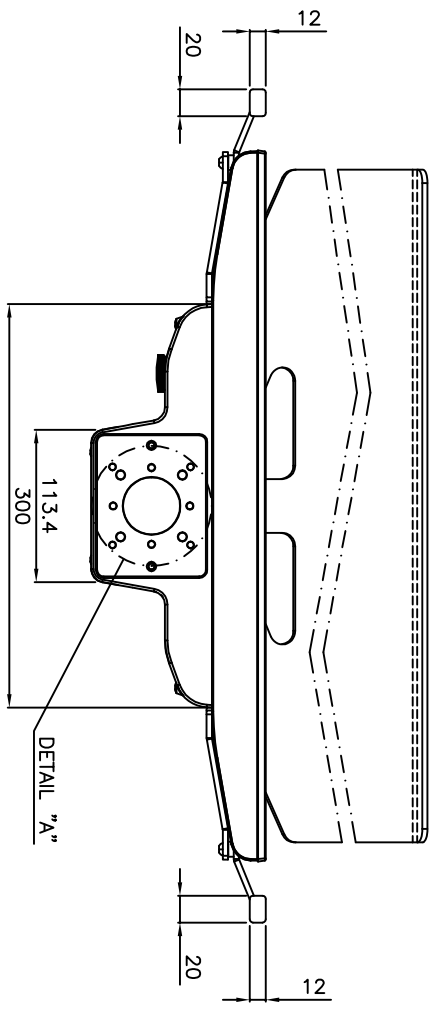
NOT QUOTED BEVELS /	MATERIAL /	TREATMENT /			
MODIFICATION	MOD. N°	DATE	SIGNATURE		

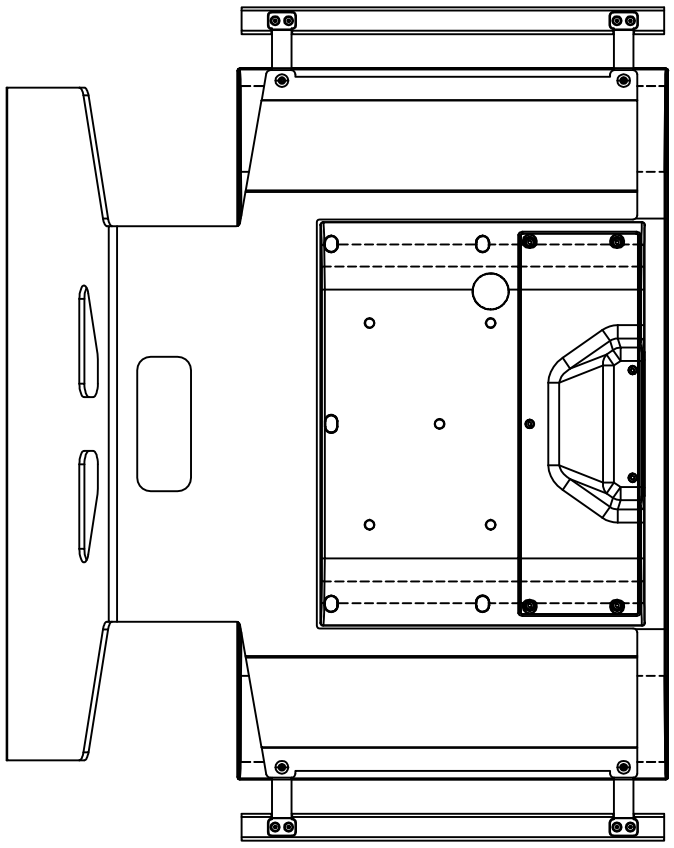
	QUALITY	<6	>6 ≤30	>30 ≤120	>120 ≤315	>315 ≤1000	>1000 ≤2000	>2000 ≤4000	>4000
COMMON TOLERANCE	COARSE	±0.2	±0.5	±0.8	±1.2	±2	±3	±4	±5
	MEDIUM	±0.1	±0.2	±0.3	±0.5	±0.8	±1.2	±2	±3
	ACCURATE	±0.05	±0.1	±0.15	±0.2	±0.3	±0.5		

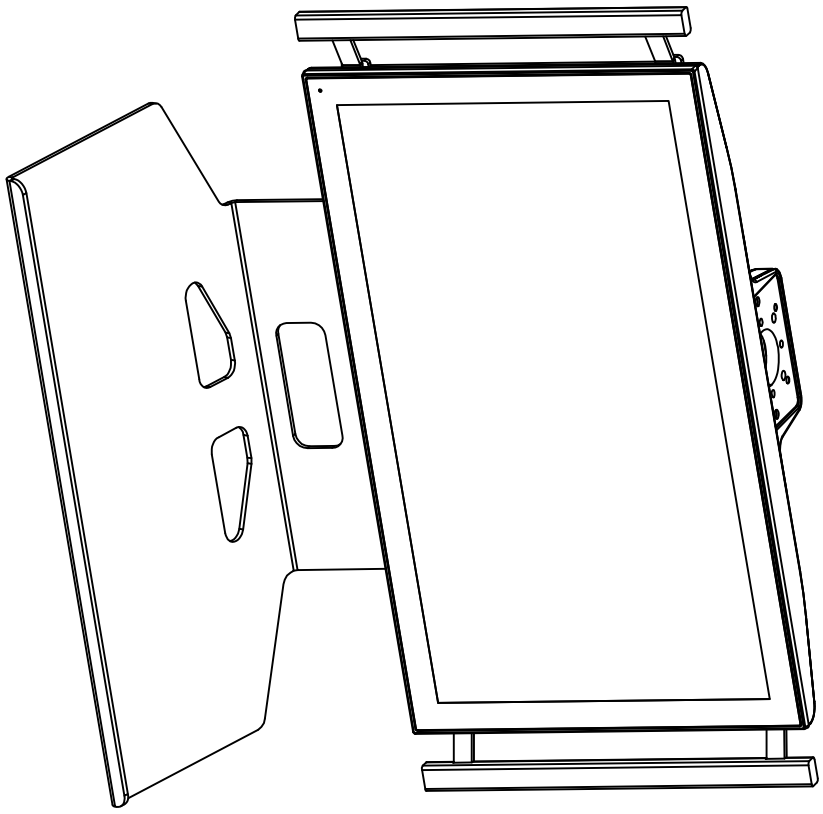
SHORT SIDE	>3 ≤6	>6 ≤30	>30 ≤120	>120
ANGULAR COMMON TOLERANCE	±1°	±30'	±20'	±10'

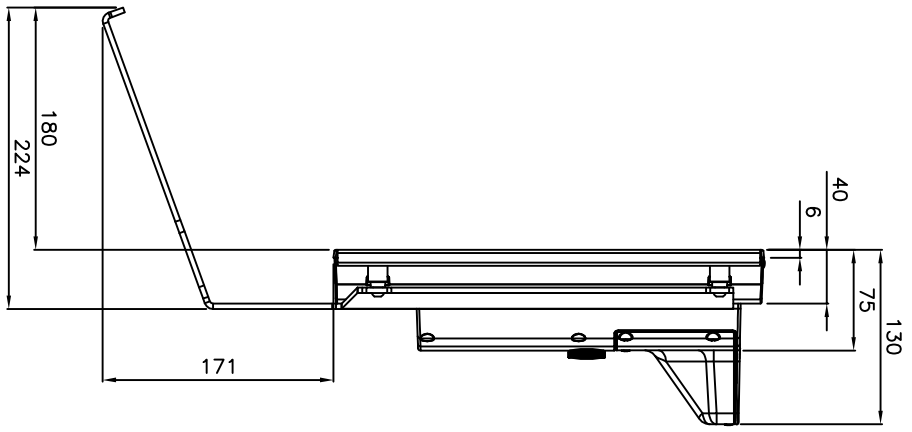
CONFIDENTIAL–PROPRIETARY

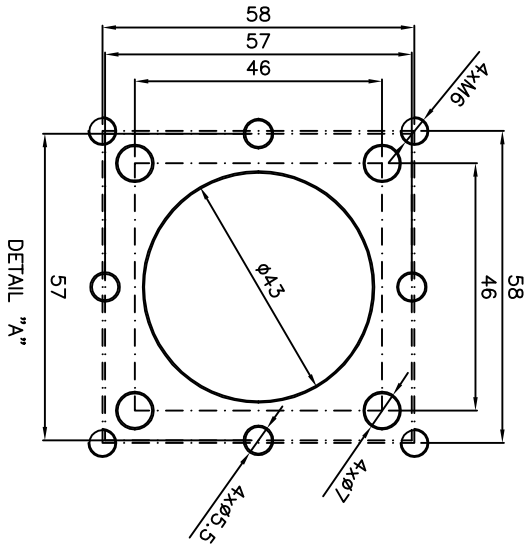
"THIS DRAWING AND SPECIFICATIONS, HEREIN, ARE THE PROPERTY OF ASEM SpA AND MUST NOT BE REPRODUCED OR COPIED OR USED IN WHOLE OR IN PART AS THE BASIS FOR THE MANUFACTURE OR SALE OF ITEMS WITHOUT WRITTEN PERMISSION."

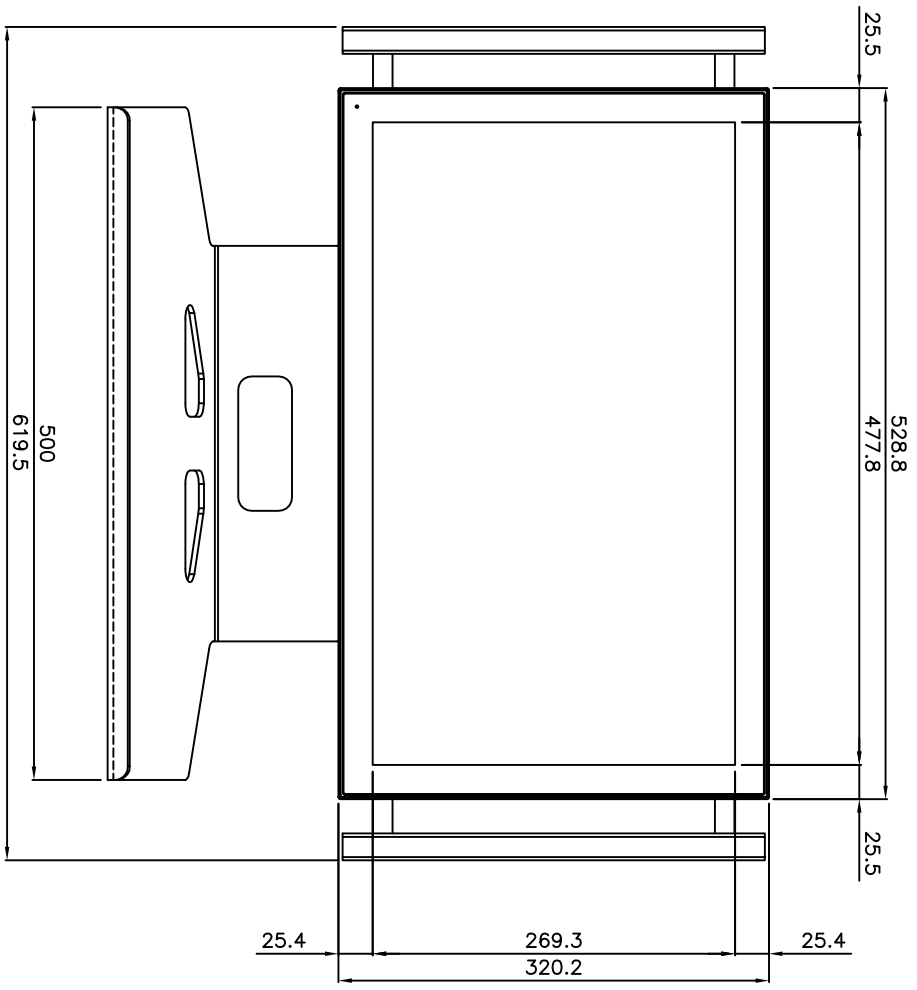












NOT QUOTED BEVELS /	MATERIAL /	TREATMENT /	
MODIFICATION	MOD. N°	DATE	SIGNATURE
Industria Informatica		SIGNATURE	DATE
1st DRAW	ROMANO	25.08.21	
DESIGN	ROMANO	25.08.21	
CHECKED			
TOLERANCE	MEDIUM		
REPLACES			
REPLACED BY			
SCALE /	UNIT MM	SHEET 3 OF 3	
DATE / SIGN.			
DATE / SIGN.			

TITLE DIMA VK3500 21.5" TOP ARM

DRAWING N° DIMA_VK3500_215_TOP | RELEASE A | LEVEL 00