CONFIDENTIAL - PROPRIETARY

"THIS DRAWING AND SPECIFICATION, HEREIN, ARE THE PROPERTY OF ASEM SpA AND MUST NOT BE REPRODUCED OR COPIED OR USED IN WHOLE OR IN PART AS THE BASIS FOR THE MANUFACTURE OR SALE OF ITEMS WHITOUT WRITTEN PERMISSION"

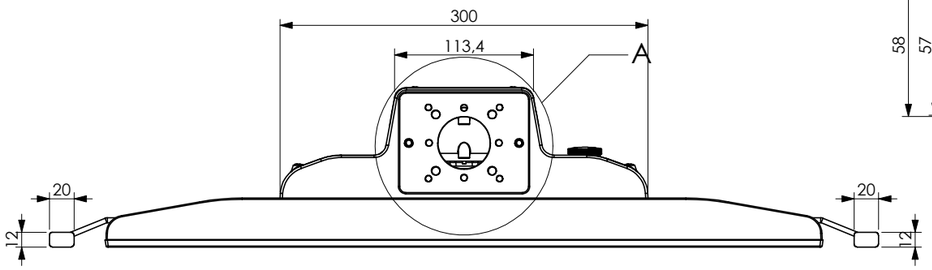

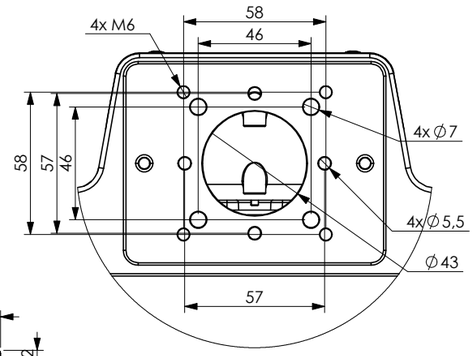

DETTAGLIO A

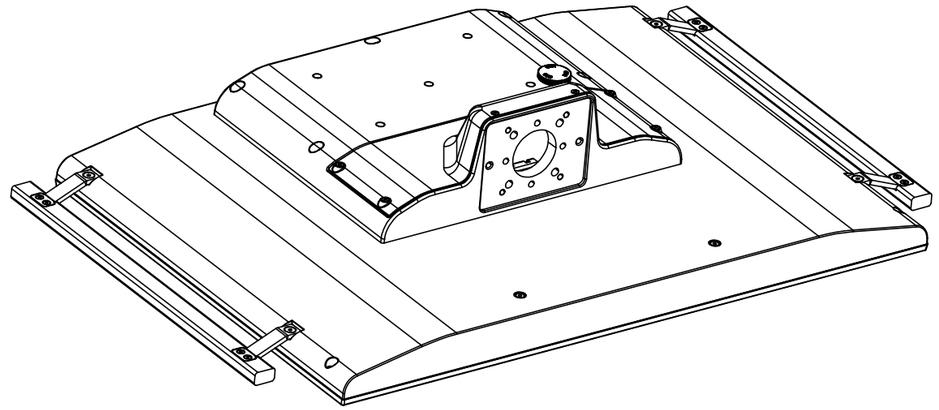

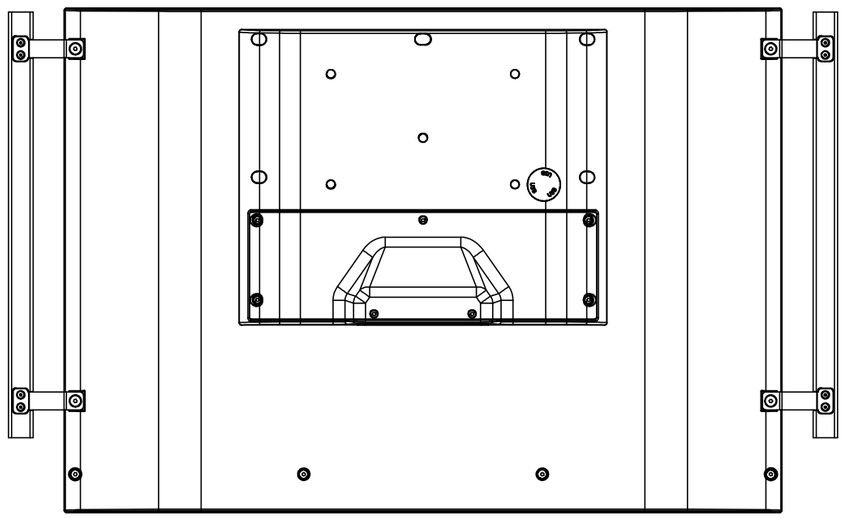

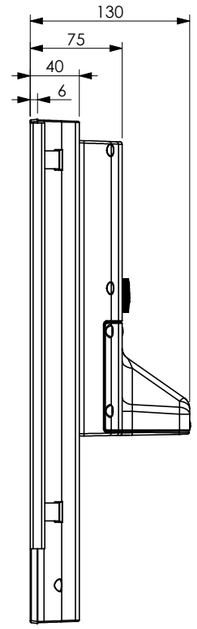

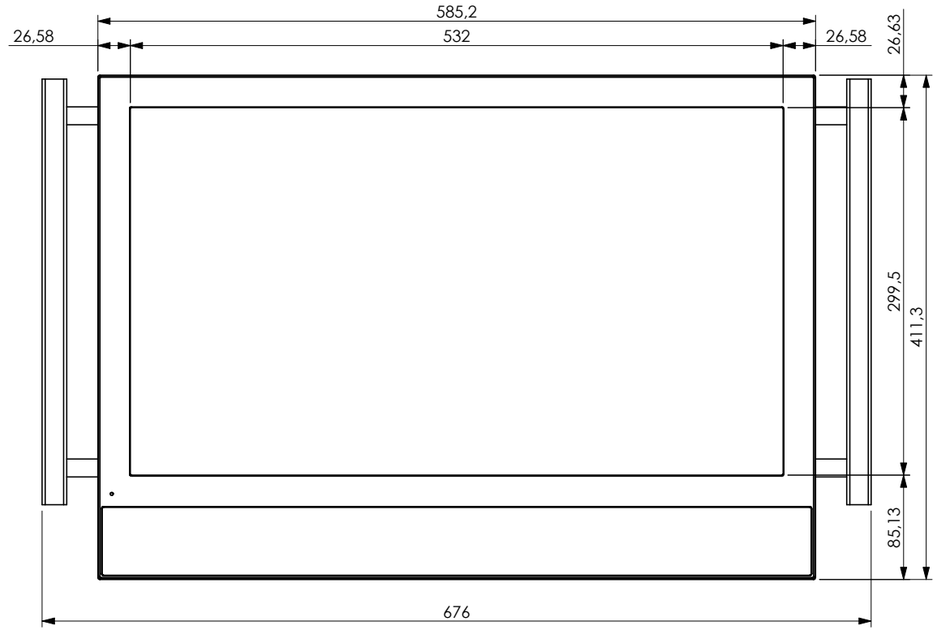

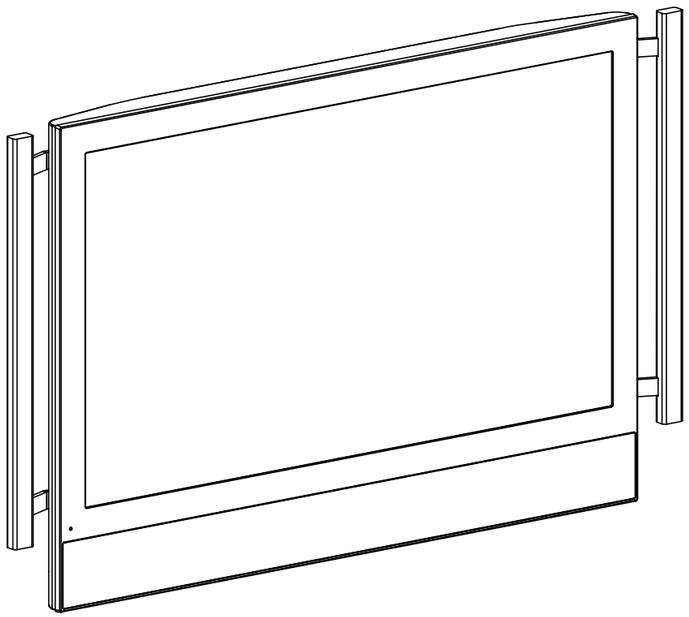

NOTE:
- ACCURATE TRIM REQUESTED
- BENDING RADIUS: MINIMUN POSSIBLE
- PERPENDICULAR AND PARALLEL GEOMETRIC TOLERANCE: MEDIUM (Max ˜0.3 mm) ON ALL DIRECTIONS
- THE DIMENSIONS INCLUDING THE TREATMENT

COMMON TOLERANCE	<6	>6 <30	>30 <120	>120 <315	>315 <1000	>1000 <2000	>2000 <4000	>4000
QUALITY								
COARSE	˜0.2	˜0.5	˜0.8	˜1.2	˜2	˜3	˜4	˜5
MEDIUM	˜0.1	˜0.2	˜0.3	˜0.5	˜0.8	˜1.2	˜2	˜3
ACCURATE	˜0.05	˜0.1	˜0.15	˜0.2	˜0.3	˜0.5		

SHORT SIDE	>3 <6	>6 <30	>30 <120	>120
ANGULAR COMMON TOLERANCE	˜1 ±	˜30 '	˜20 '	˜10 '

MATERIAL			THICKNESS mm	MODIFICATION N° / DATE
TREATMENT				SIGNATURE
ASEM		1st DRAW	DESIGN	CHECKED
	DATE	30/05/2022		
	SIGNATURE	Dereani		
TOLERANCE: MEDIUM	SCALE: 1:5	NOT QUOTED BEVELS: 2x45°	NOT QUOTED RADIUS: R2	UNIT: mm
SHEET: 4 of 9				

TITLE: DIMA VK3500-BA / MK200-BA 24,0 BOTTOM ARM RESISTIVO CON MANIGLIE

DRAWING N°	RELEASE	LEVEL	SIZE
00_d18201931	A	00	A3

CONFIDENTIAL - PROPRIETARY

"THIS DRAWING AND SPECIFICATION, HEREIN, ARE THE PROPERTY OF ASEM SpA AND MUST NOT BE REPRODUCED OR COPIED OR USED IN WHOLE OR IN PART AS THE BASIS FOR THE MANUFACTURE OR SALE OF ITEMS WHITOUT WRITTEN PERMISSION"

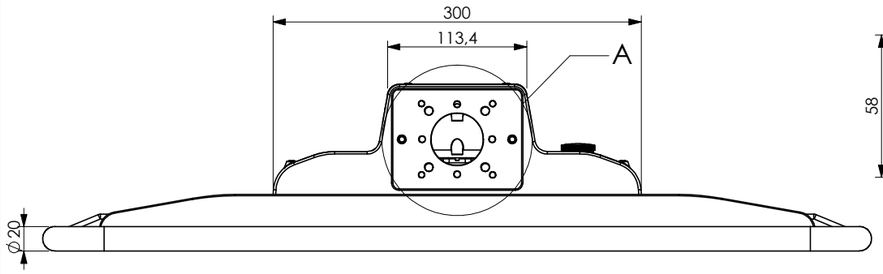

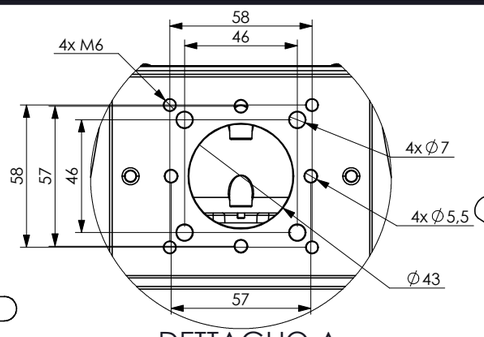

DETTAGLIO A

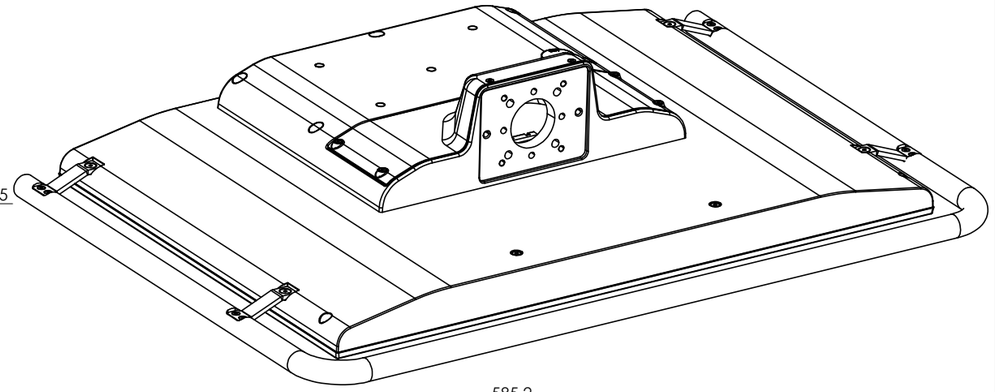

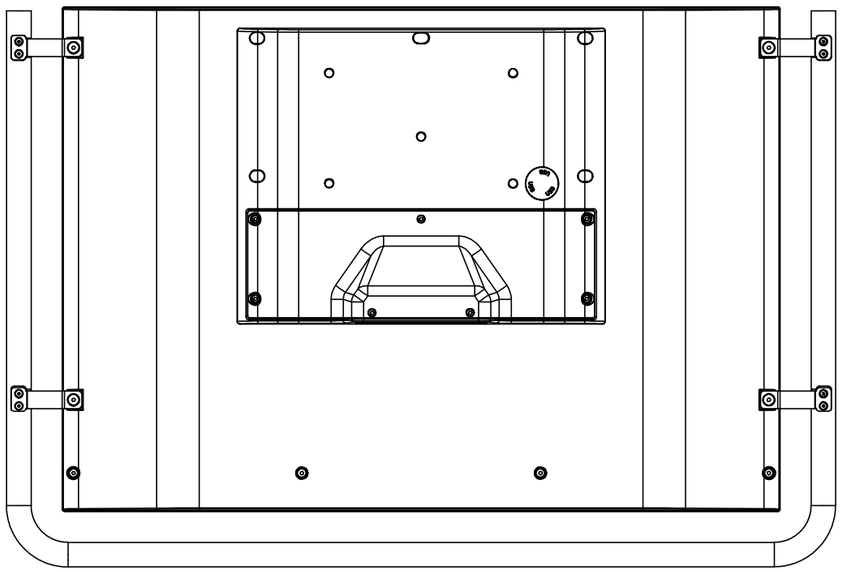

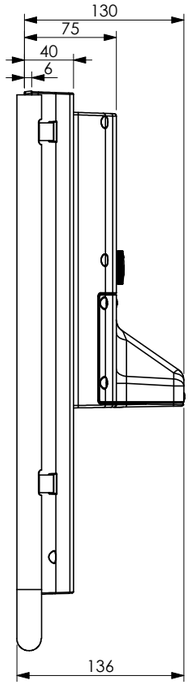

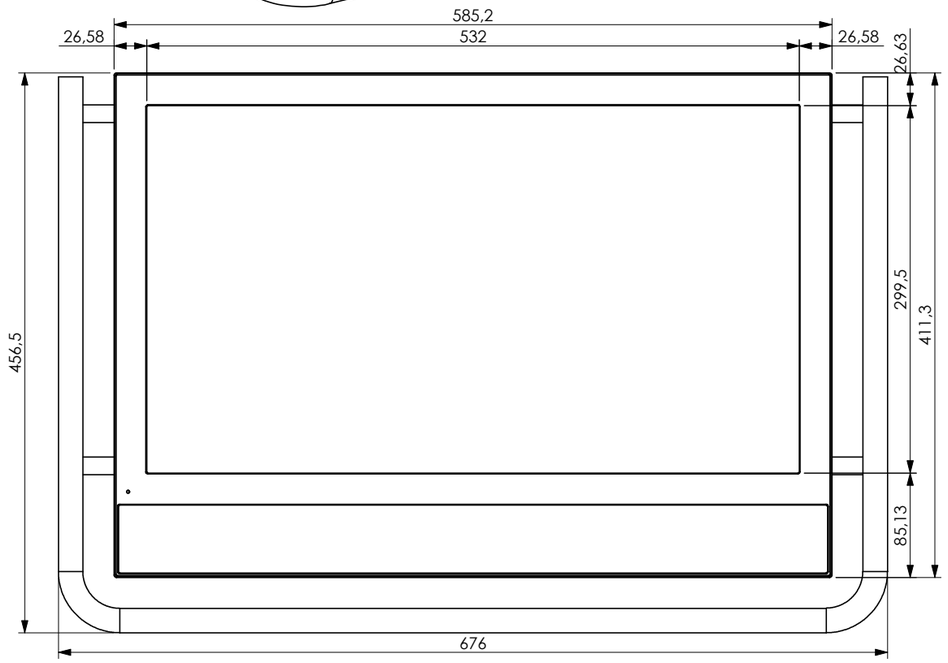

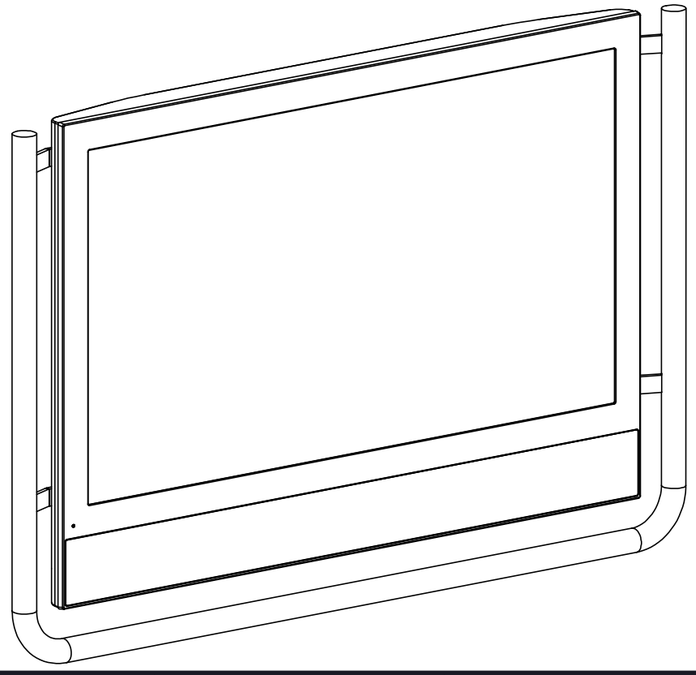

NOTE:
- ACCURATE TRIM REQUESTED
- BENDING RADIUS: MINIMUN POSSIBLE
- PERPENDICULAR AND PARALLEL GEOMETRIC TOLERANCE: MEDIUM (Max ˙0.3 mm) ON ALL DIRECTIONS
- THE DIMENSIONS INCLUDING THE TREATMENT

SHORT SIDE	>3 ≤6	>6 ≤30	>30 ≤120	>120
ANGULAR COMMON TOLERANCE	˙1±	˙30 '	˙20 '	˙10 '

COMMON TOLERANCE	<6	>6 ≤30	>30 ≤120	>120 ≤315	>315 ≤1000	>1000 ≤2000	>2000 ≤4000	>4000
COARSE	˙0.2	˙0.5	˙0.8	˙1.2	˙2	˙3	˙4	˙5
MEDIUM	˙0.1	˙0.2	˙0.3	˙0.5	˙0.8	˙1.2	˙2	˙3
ACCURATE	˙0.05	˙0.1	˙0.15	˙0.2	˙0.3	˙0.5		

MATERIAL			THICKNESS mm	MODIFICATION N°	DATE
TREATMENT					SIGNATURE
ASEM		1st DRAW	DESIGN	CHECKED	TOLERANCE: MEDIUM; SCALE: 1:5
	DATE	30/05/2022			NOT QUOTED BEVELS: 2x45°; UNIT: mm; SHEET: 5 of 9
	SIGNATURE	Dereani			NOT QUOTED RADIUS: R2

TITLE: DIMA VK3500-BA / MK200-BA 24,0 BOTTOM ARM RESISTIVO CON MANIGLIONE

DRAWING N°	RELEASE	LEVEL	SIZE
00_d18201931	A	00	A3

CONFIDENTIAL - PROPRIETARY

"THIS DRAWING AND SPECIFICATION, HEREIN, ARE THE PROPERTY OF ASEM SpA AND MUST NOT BE REPRODUCED OR COPIED OR USED IN WHOLE OR IN PART AS THE BASIS FOR THE MANUFACTURE OR SALE OF ITEMS WHITOUT WRITTEN PERMISSION"

NOTE:
- ACCURATE TRIM REQUESTED
- BENDING RADIUS: MINIMUN POSSIBLE
- PERPENDICULAR AND PARALLEL GEOMETRIC TOLERANCE: MEDIUM (Max ˋ0.3 mm) ON ALL DIRECTIONS
- THE DIMENSIONS INCLUDING THE TREATMENT

SHORT SIDE	>3 ≤6	>6 ≤30	>30 ≤120	>120
ANGULAR COMMON TOLERANCE	ˋ1 ±	ˋ30 '	ˋ20 '	ˋ10 '

COMMON TOLERANCE / QUALITY	<6	>6 ≤30	>30 ≤120	>120 ≤315	>315 ≤1000	>1000 ≤2000	>2000 ≤4000	>4000
COARSE	ˋ0.2	ˋ0.5	ˋ0.8	ˋ1.2	ˋ2	ˋ3	ˋ4	ˋ5
MEDIUM	ˋ0.1	ˋ0.2	ˋ0.3	ˋ0.5	ˋ0.8	ˋ1.2	ˋ2	ˋ3
ACCURATE	ˋ0.05	ˋ0.1	ˋ0.15	ˋ0.2	ˋ0.3	ˋ0.5	ˋ0.3	

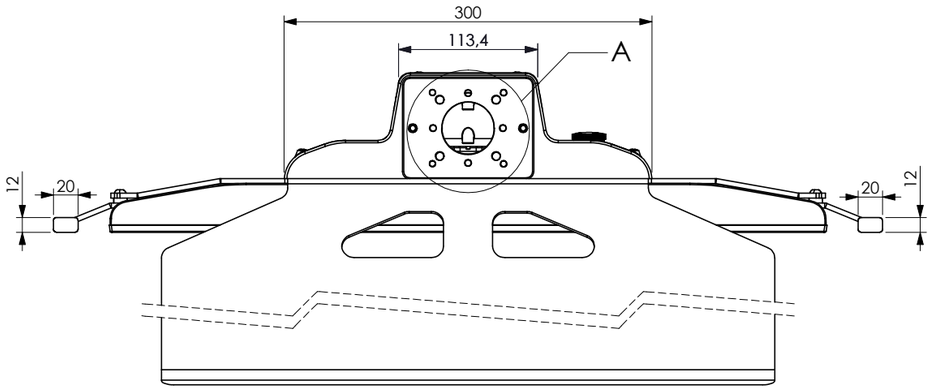

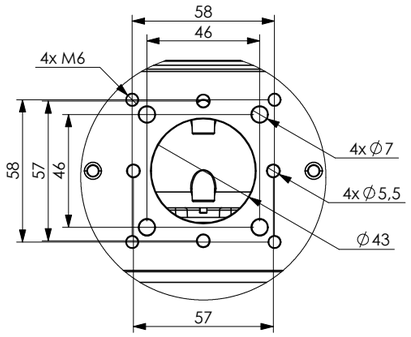

DETTAGLIO A

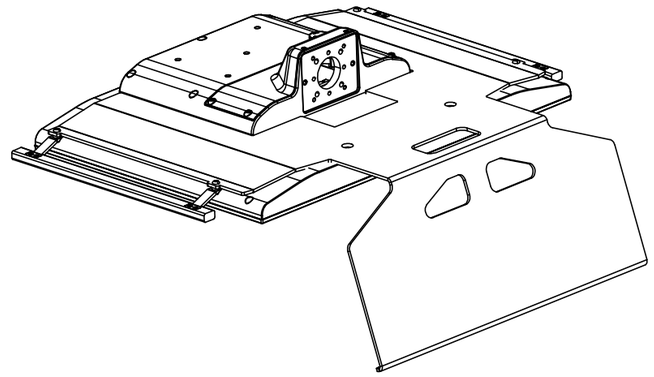

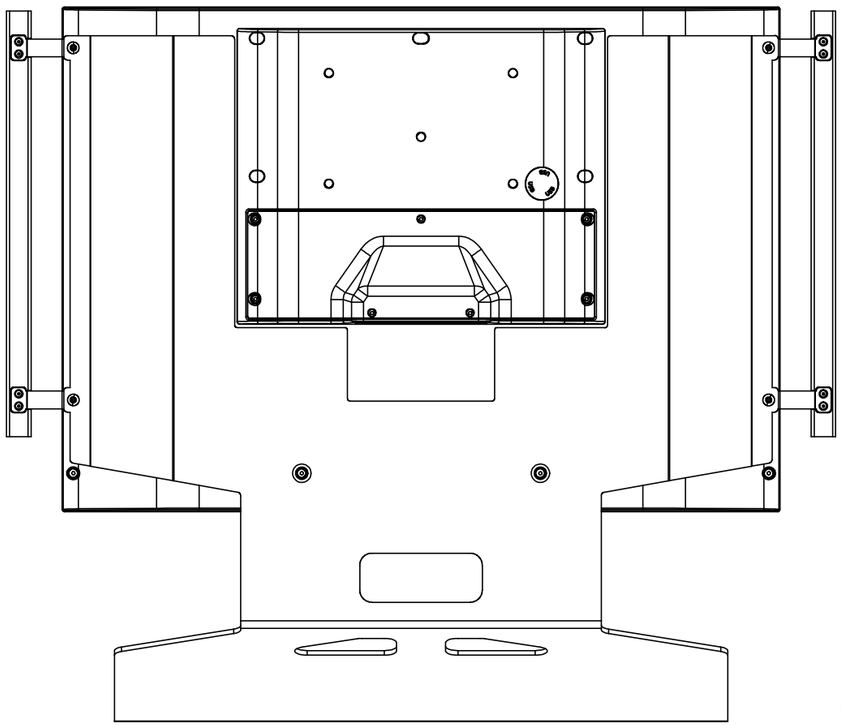

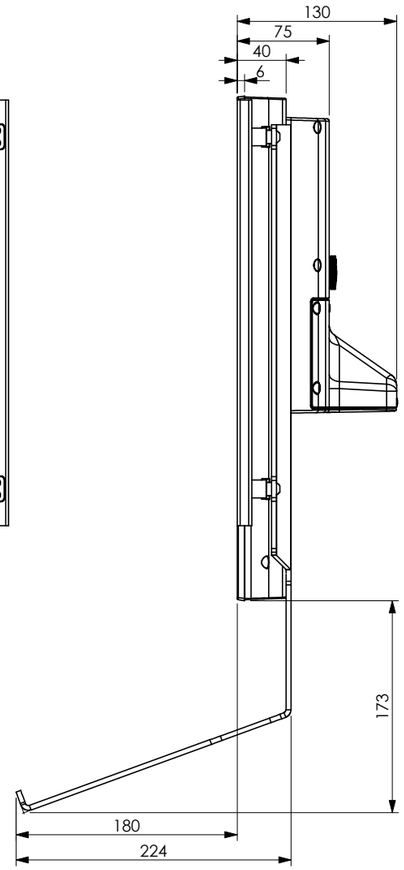

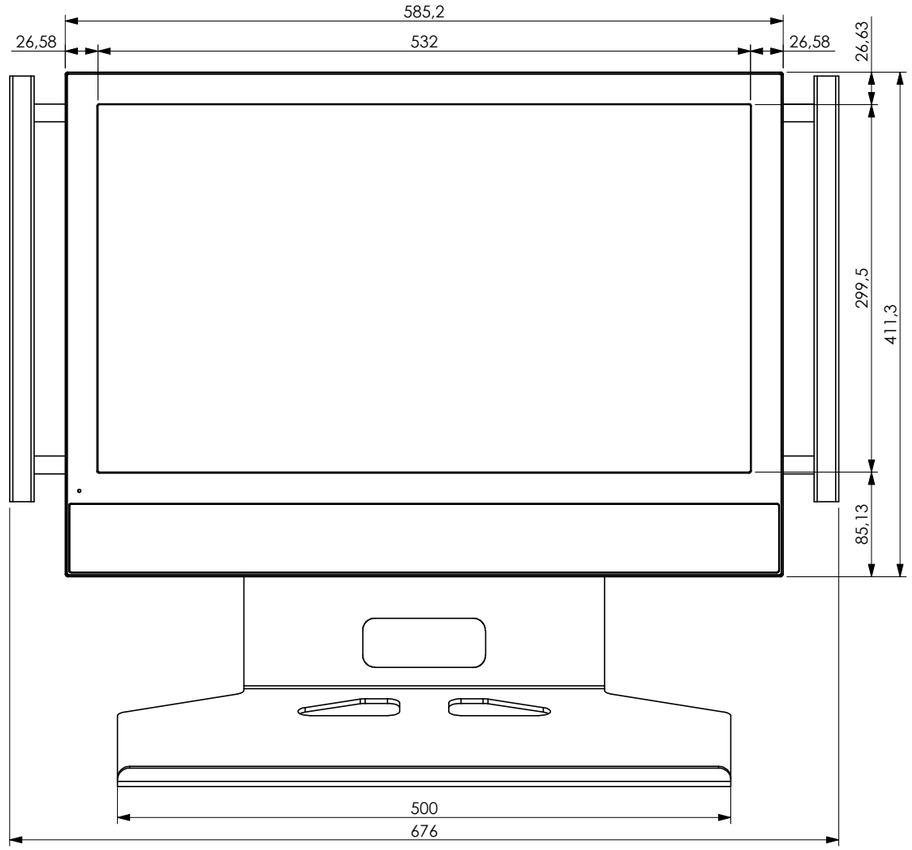

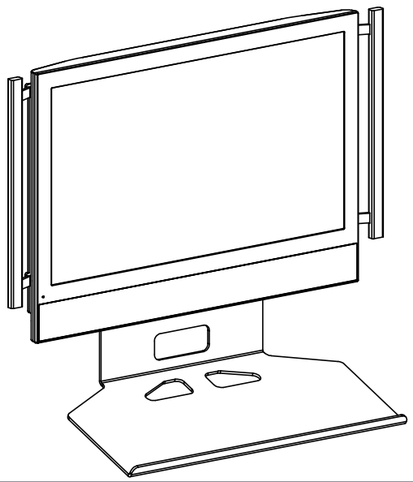

MATERIAL			THICKNESS mm	MODIFICATION N°	DATE
TREATMENT					SIGNATURE
ASEM		1st DRAW	DESIGN	CHECKED	TOLERANCE: MEDIUM
	DATE	30/05/2022			SCALE: 1:5
	SIGNATURE	Dereani			NOT QUOTED BEVELS: 2x45°
					NOT QUOTED RADIUS: R2
					UNIT: mm
					SHEET 6 of 9 OF

TITLE: DIMA VK3500-BA / MK200-BA 24,0 BOTTOM ARM RESISTIVO CON MANIGLIE E VASSOIO PORTA TASTIERA

DRAWING N°	RELEASE	LEVEL	SIZE
00_d18201931	A	00	A3