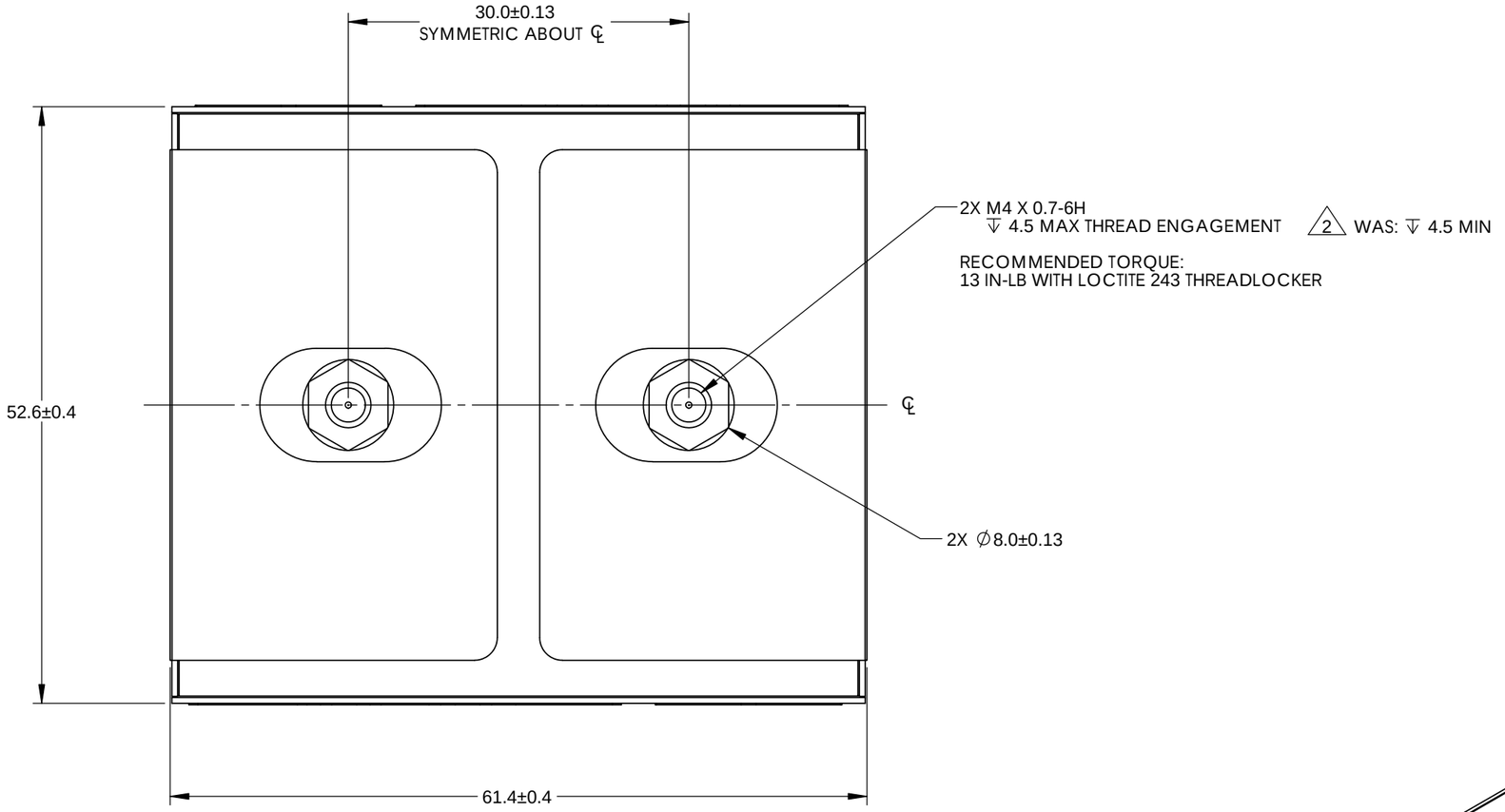

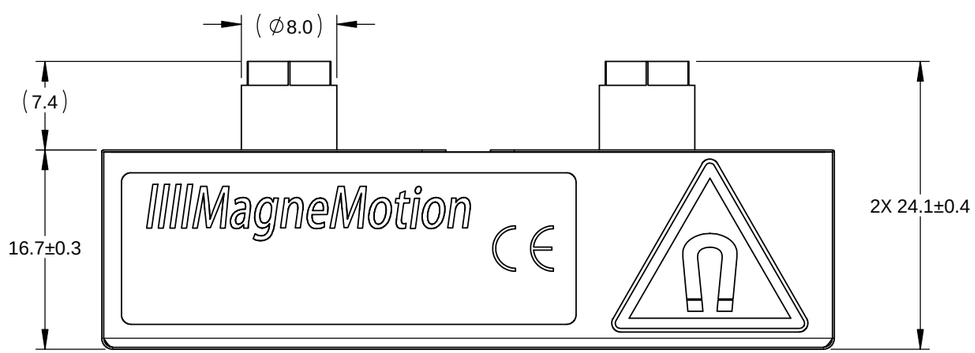

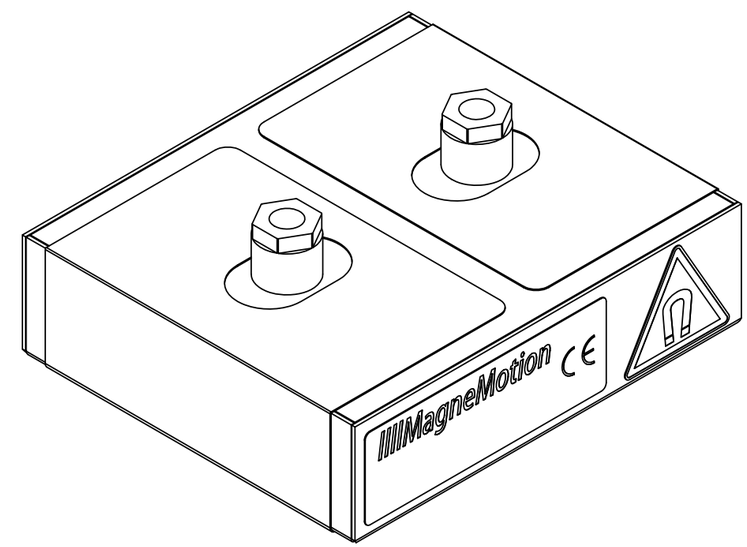

2 CHANGED HOLE DEPTH INFORMATION TO: ↧4.5 MAX THREAD ENGAGEMENT FROM: ↧4.5 MIN.

UNLESS OTHERWISE SPECIFIED		
ALL DIMENSIONS IN MM	SURFACE FINISH	TOLERANCES
BREAK ALL SHARP EDGES	[63] 1.6	X.XX ± 0.13
CLEAN AND DEBURR		X.X ± 0.25
USE MIN BEND RADII		X. ± 0.5
		DEG ± 0.5°
		TORQUE ± 25%

MAGNEMOTION CONFIDENTIAL
Copyright© 2014 MagneMotion Inc.
The information contained in this drawing is the sole property of MagneMotion Inc. Any reproduction in part or whole without the written permission of MagneMotion is prohibited

INTERPRET DRAWING PER ANSI Y14.5M-1982

DO NOT SCALE DRAWING	SHEET SIZE B	THIRD-ANGLE PROJECTION	PROJECT SB1	DATE 2014-03-24
CAD PKG. SolidWorks 2012	SCALE 2:1		ENGINEER MBOTTASSO	DRAWN BY MBOTTASSO
CAD FILE 701-1458-01.SLDDRW				

MagneMotion Inc.
139 Barnum Road
Devens, MA 01434 USA
(978) 757-9100

CAGE CODE 1LR11

TITLE ICD, MAGNET, STND-ALONE, UHMW STRIP, GEN 4.2, ML

REV 2

MATERIAL -

DWG NO. 701-1458-01

SHEET 1 OF 1