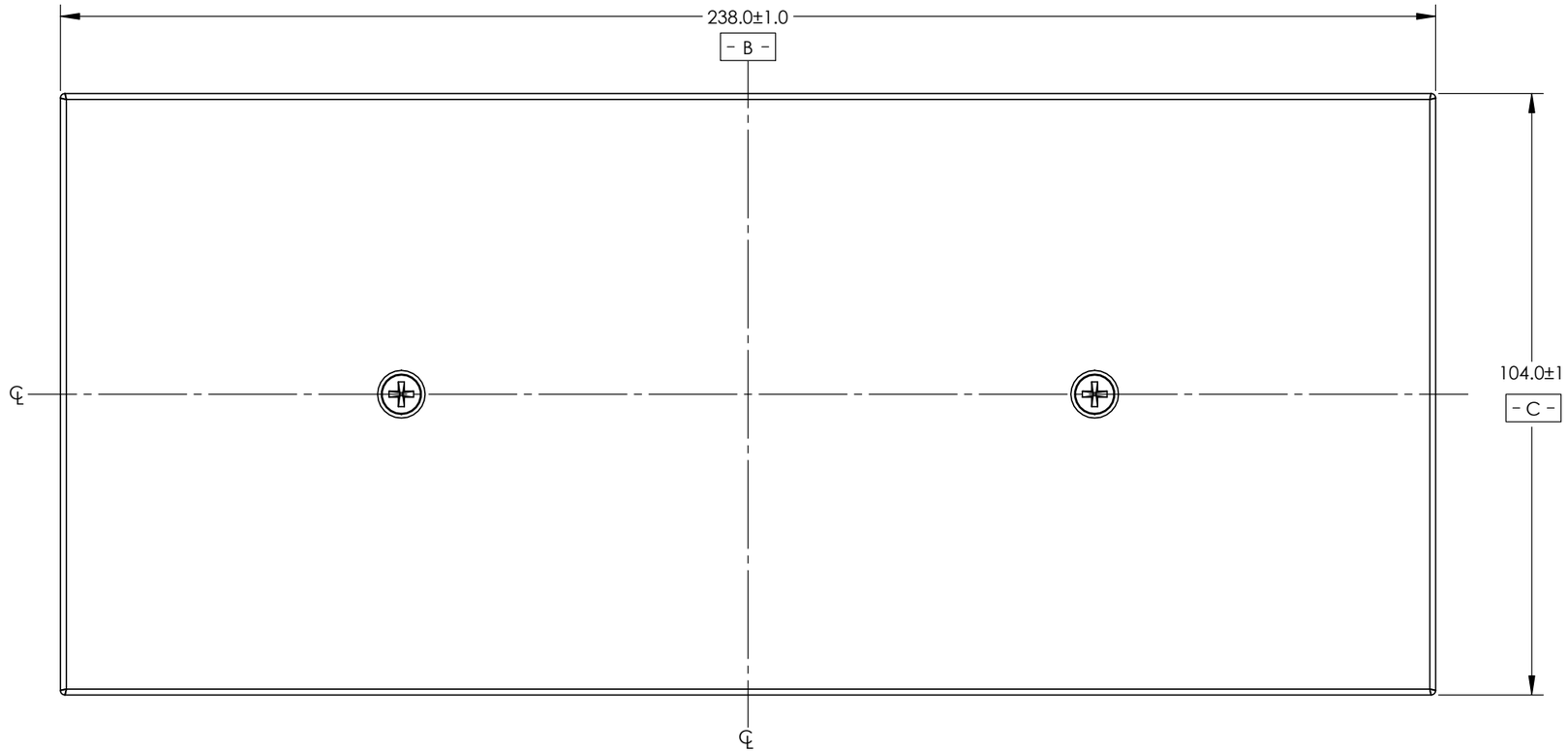

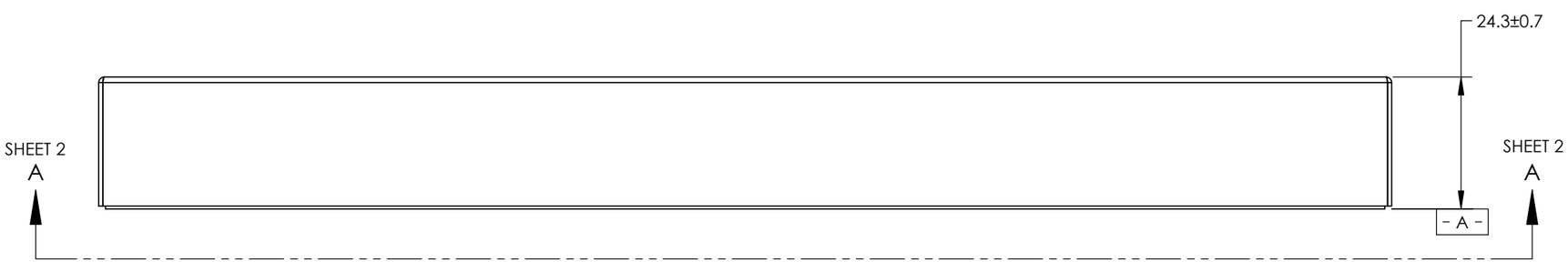

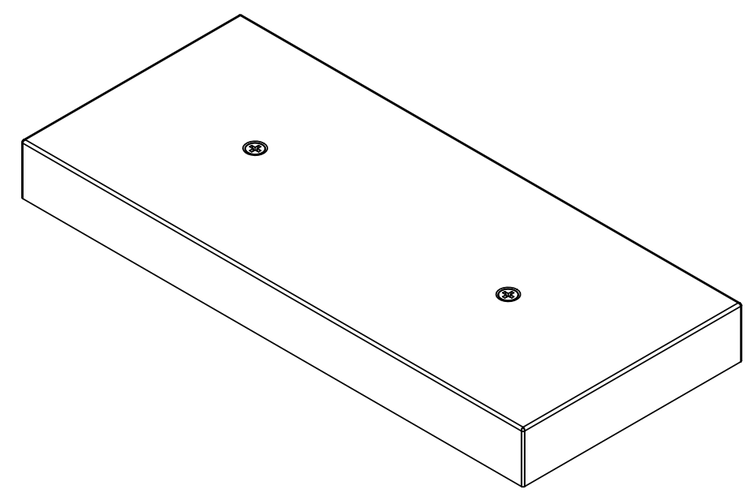

NOTES:

1. APPROXIMATE WEIGHT: 4.5KG [10 LBS].

UNLESS OTHERWISE SPECIFIED		
ALL DIMENSIONS IN MM	SURFACE FINISH	TOLERANCES
BREAK ALL SHARP EDGES	[63] 1.6	X.XX ± 0.13 X.X ± 0.25 X. ± 0.5 DEG ± 0.5° TORQUE ± 25%
CLEAN AND DEBURR		
USE MIN BEND RADII		

MAGNEMOTION CONFIDENTIAL
Copyright© 2015 MagneMotion Inc.
The information contained in this drawing is the sole property of MagneMotion Inc. Any reproduction in part or whole without the written permission of MagneMotion is prohibited

INTERPRET DRAWING PER ANSI Y14.5M-1982

DO NOT SCALE DRAWING	SHEET SIZE B	THIRD-ANGLE PROJECTION	PROJECT QSHT	DATE 2015-08-07
CAD PKG. SolidWorks 2015	SCALE 1:2		ENGINEER T. ROSSWAAG	DRAWN BY T. ROSSWAAG
CAD FILE 701-1642-00.SLDDRW				

MagneMotion Inc.
139 Barnum Road
Devens, MA 01434 USA
(978) 757-9100

CAGE CODE 1LR11

TITLE ICD, QSHT MAGNET ARRAY, HI-FLUX, HI-TEMP, 2 CYCLE

REV 1

MATERIAL -

DWG NO. 701-1642-00

SHEET 1 OF 2

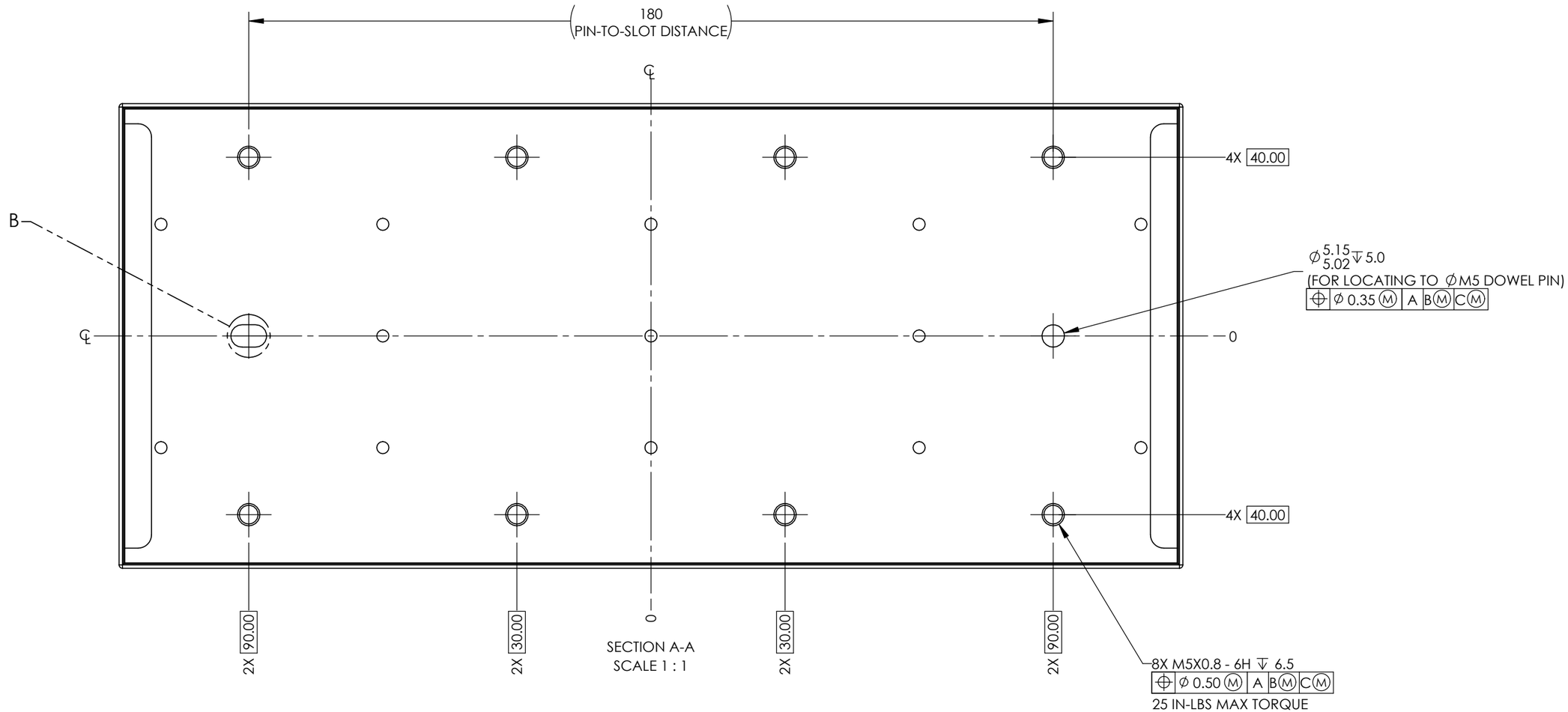

SECTION A-A
SCALE 1 : 1

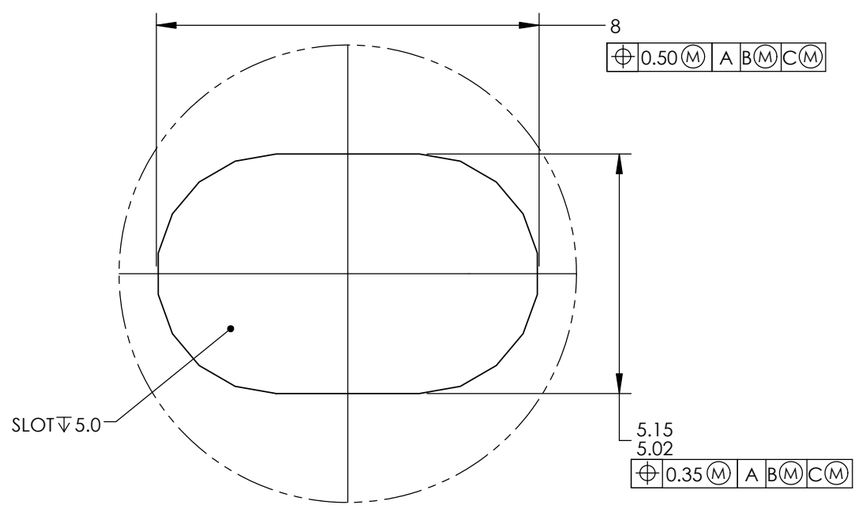

DETAIL B
SCALE 8 : 1

MagneMotion Inc. 139 Barnum Road Devens, MA 01434 USA (978) 757-9100	TITLE ICD, QSHT MAGNET ARRAY, HI-FLUX, HI-TEMP, 2 CYCLE		REV 1
	MATERIAL -		
CAGE CODE 1LR11	DWG NO. 701-1642-00	SHEET 2 OF 2	