IF IN DOUBT ASK ENGINEERING/QUALITY DEPARTMENT | DO NOT SCALE | ALL DIMENSIONS IN MILLIMETRES mm

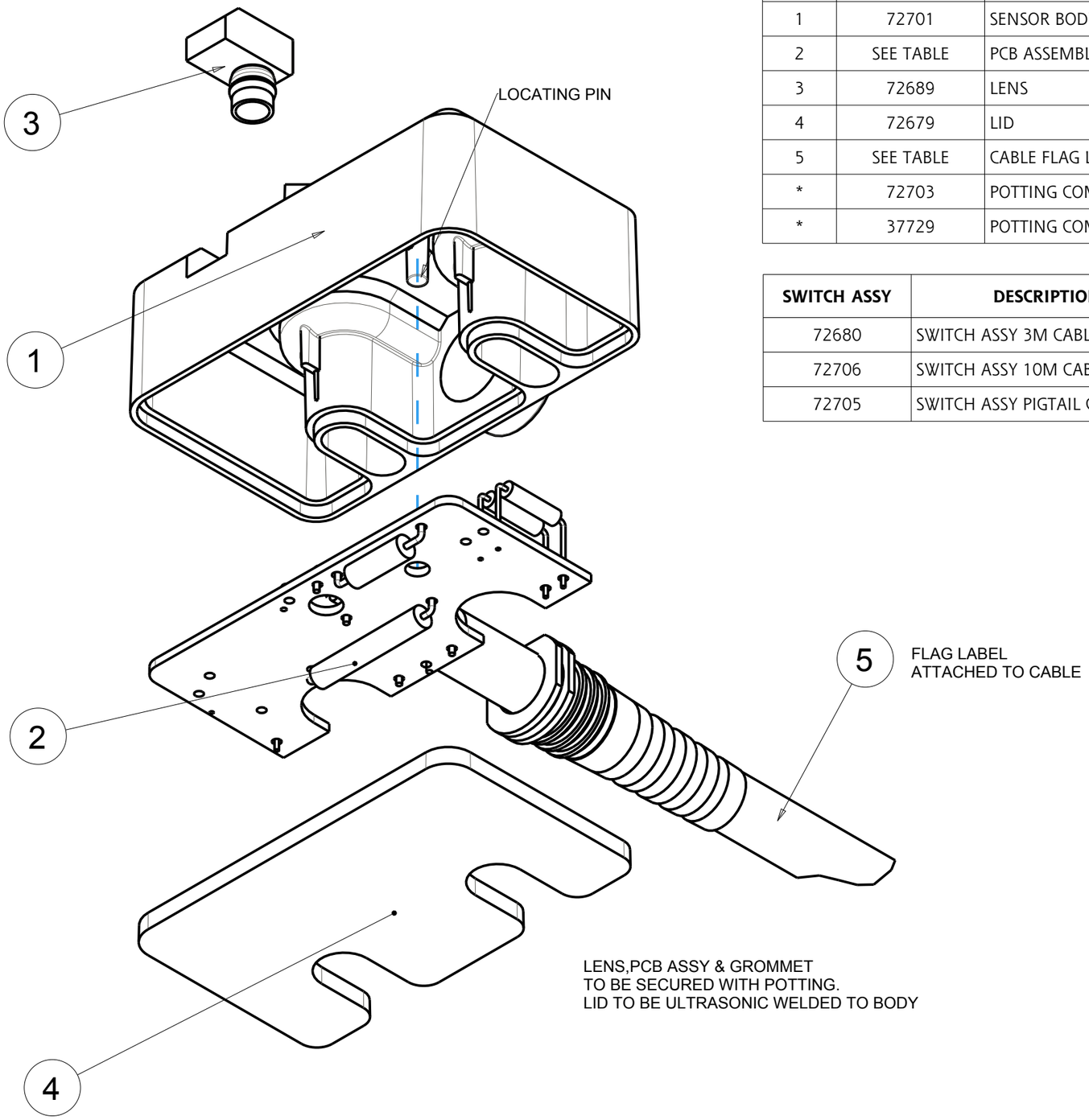

ITEM	PART No	DESCRIPTION	QTY
1	72701	SENSOR BODY LASER-ETCHED	1
2	SEE TABLE	PCB ASSEMBLY ES1	1
3	72689	LENS	1
4	72679	LID	1
5	SEE TABLE	CABLE FLAG LABEL	1
*	72703	POTTING COMPOUND HARDENER	5ml
*	37729	POTTING COMPOUND CLEAR	5ml

SWITCH ASSY	DESCRIPTION	PCB ASSY	LABEL
72680	SWITCH ASSY 3M CABLE	72684	72686
72706	SWITCH ASSY 10M CABLE	72698	72687
72705	SWITCH ASSY PIGTAIL CONN	72699	72688

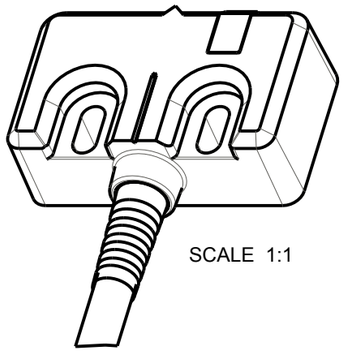

THIS DRAWING IS THE PROPERTY OF ROCKWELL AUTOMATION/EJA LTD AND MAY NOT BE COPIED, USED OR DISCLOSED FOR ANY PURPOSE EXCEPT AS AUTHORISED IN WRITING BY ROCKWELL AUTOMATION/EJA LTD

SYMBOL ◇ INDICATES CRITICAL INSPECTION ITEM

ANGULAR & LINEAR TOLERANCES - UNLESS OTHERWISE SPECIFIED

X = ± 2°	X = ± 0.5mm
X.X = ± 1°	X.X = ± 0.2mm
X.XX = ± 0.5°	X.XX = ± 0.1mm
X.XXX = ± 0.25°	X.XXX = ± 0.05mm

REV	EO	REVISION CHANGES	DATE	AUTH BY	DRN BY
1	27843	FIRST ISSUE	090207	TD	TD
2	27857	ADD POTTING TO BOM REMOVE LEVEL INDICATION	261007	TD	TD
3	27908	ADD HARDENER TO BOM	291107	TD	TD
4	27975	POT QTY 5ML WAS 15ML	310108	TD	TD

SCALE 2:1 | THIRD ANGLE PROJECTION

Must Conform to RoHS Directive (2002/95/EC)

MATERIAL N/A

FINISH N/A

TITLE SENSOR ASSEMBLY

Rockwell Automation | Allen-Bradley | Guardmaster

Ormside Close, Hindley Green,
Wigan, Lancashire, WN2 4HR
TEL: +44 1942 257112
FAX: +44 1942 523259

DRAWN TD | DATE 09-02-07 | A3

CHECKED | DATE

DRG No 72680 | REV 4

SHEET 1 of 1 | ProEngineer ASSEM