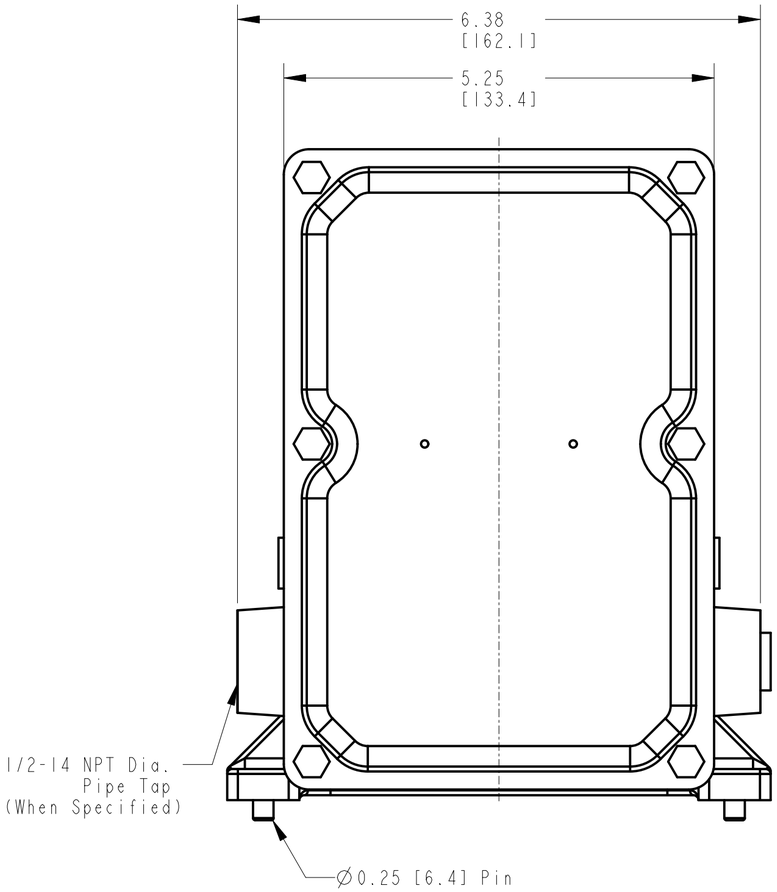

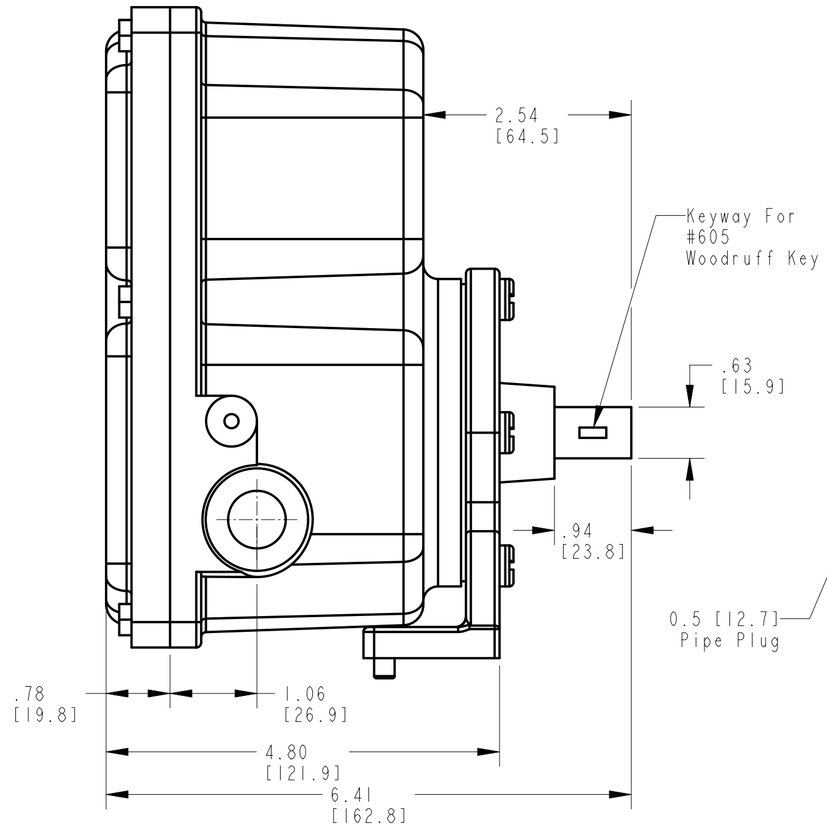

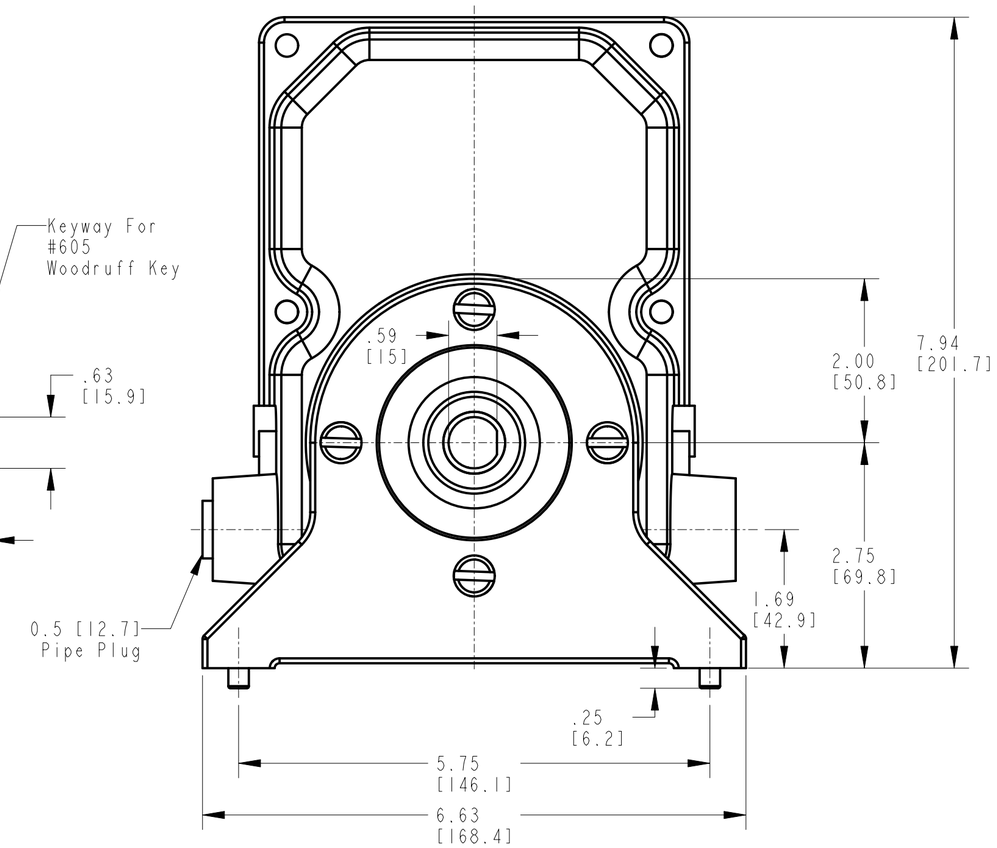

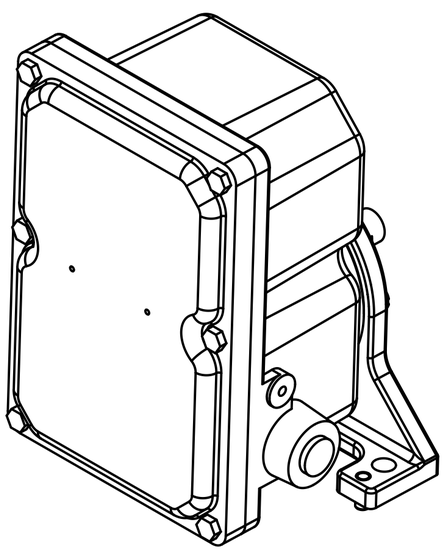

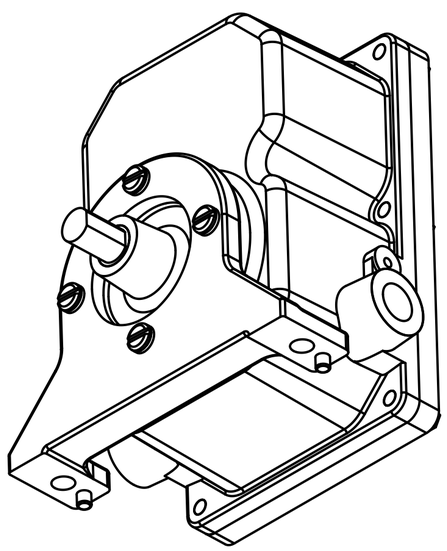

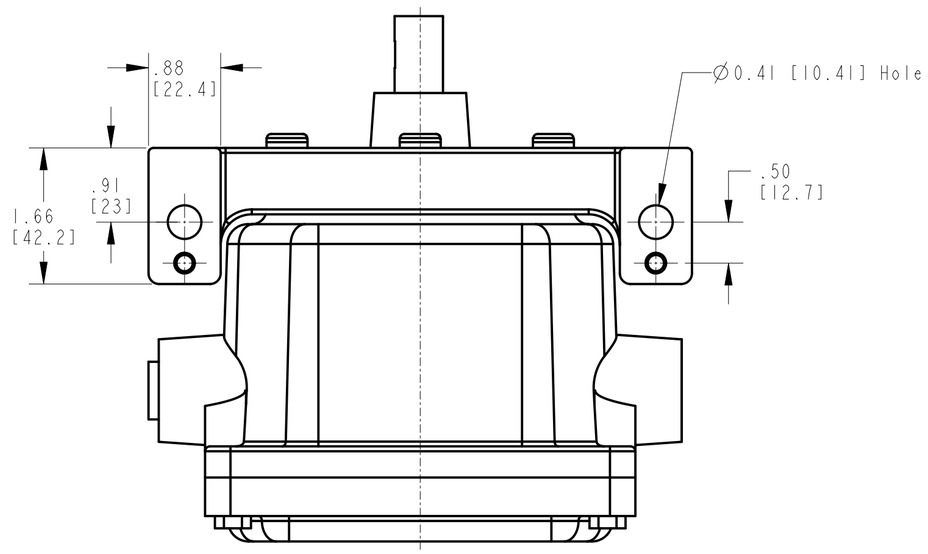

DIMENSIONS IN INCHES [MILLIMETERS].
DIMENSIONS ARE NOT INTENDED TO BE USED IN MANUFACTURING PURPOSES.