CRITICAL TO QUALITY CLASSIFICATION TABLE
PERFORMANCE, FIRST, ASSEMBLY
X=IDENTIFIES APPLICABLE CLASSIFICATION(S)
◇=ENGINEERING AND/OR MANUFACTURING REQUIREMENT
⊗=REGULATORY REQUIREMENT - CONFORMANCE IS MANDATORY

COMMENTS	DRAWING (ZONE)	F	F	A	R
ROHS	H1				X

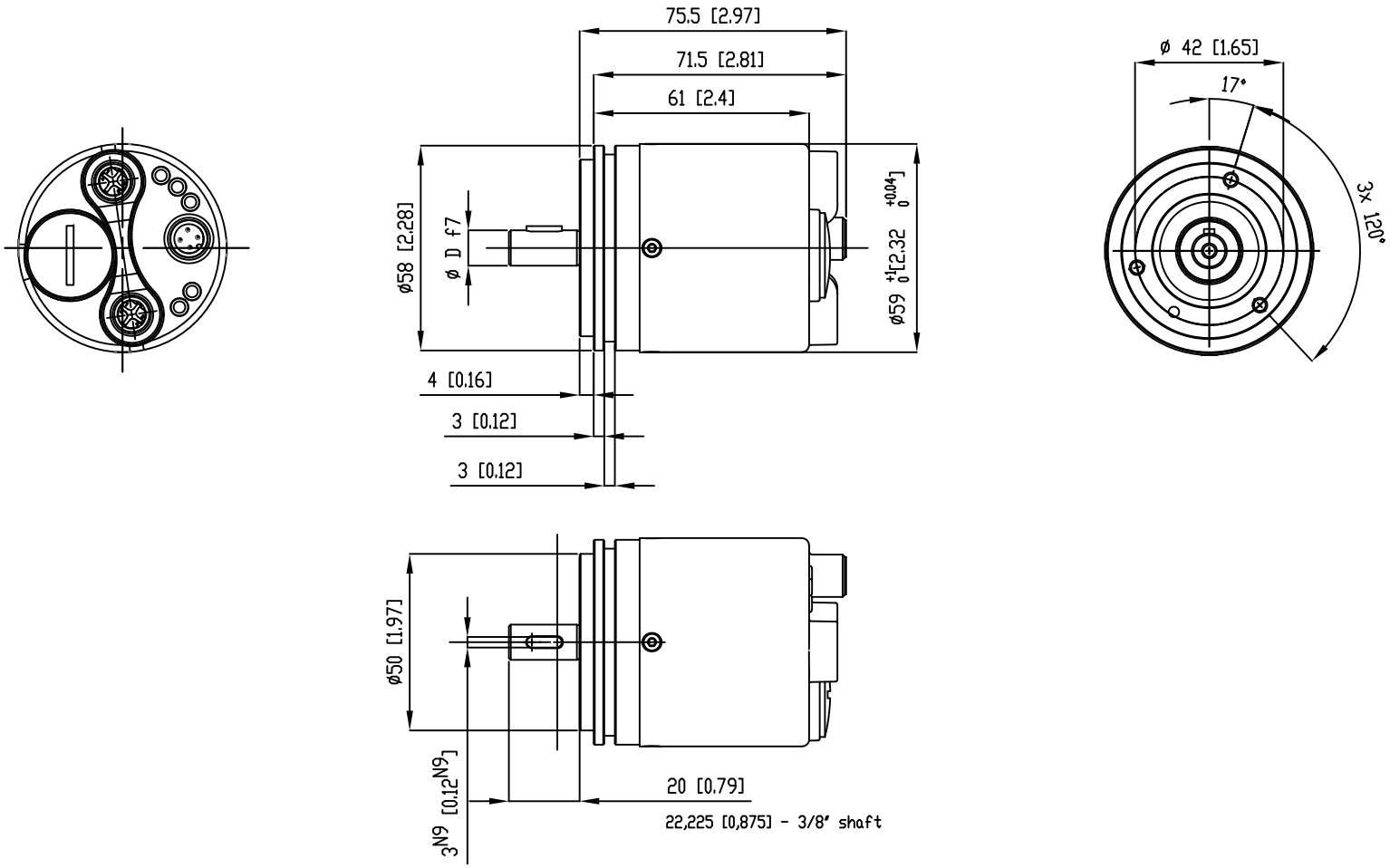

SYNCHRO FLANGE

MUST COMPLY WITH ROCKWELL AUTOMATION ENVIRONMENTAL SPECIFICATION 9100-20-01

Rockwell Automation

CONFIDENTIAL AND PROPRIETARY INFORMATION. THIS DOCUMENT CONTAINS CONFIDENTIAL AND PROPRIETARY INFORMATION OF ROCKWELL AUTOMATION, INC. AND MAY NOT BE USED, COPIED OR DISCLOSED TO OTHERS, EXCEPT WITH THE AUTHORIZED WRITTEN PERMISSION OF ROCKWELL AUTOMATION, INC.

DESCRIPTION	DATE	SHEET	OF
843E ETHERNET/IP, ENCODER	2021-09-15	1	1

CREATED BY	CHANGED BY	SIZE	DIR	VER
VR1	NKUMAR23	D	843E-XIPXBA4	