RIGHT ANGLE FEMALE END VIEW

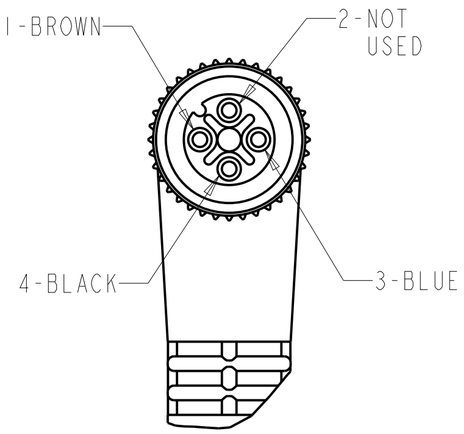


3-PIN, M12
RIGHT ANGLE FEMALE CONNECTOR

RIGHT ANGLE MALE END VIEW

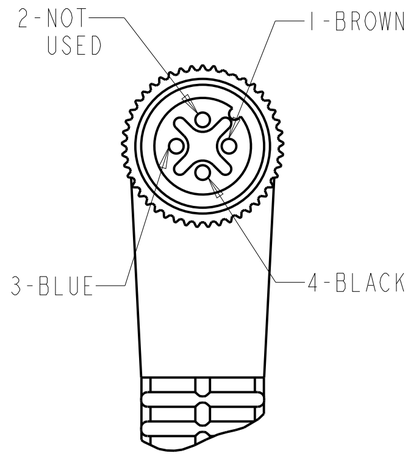


3-PIN, M12
RIGHT ANGLE MALE CONNECTOR

## SPECIFICATIONS

| | |
|---|---|
| CERTIFICATIONS | UL RECOGNIZED AND CSA CERTIFIED |
| COUPLING NUT MATERIAL | EPOXY-COATED ZINC |
| CONNECTOR OVERMOLD MATERIAL | OIL RESISTANT PUR |
| CONTACT PLATING | GOLD OR GOLD FLASH OVER PALLADIUM-NICKEL |
| CONTACT MATERIAL | BRASS OR COPPER ALLOY |
| CABLE TYPE | PVC, 22AWG, 300V |
| CABLE JACKET COLOR | GRAY |
| BEND RADIUS | 10 X DIAMETER |
| NUMBER OF CONDUCTORS [AWG] | 3x22 AWG |
| SHIELDING | UNSHIELDED |
| CABLE RATING | UL PLTC AWM STYLE 2661 VW-1 105C 300V, CSA AWM A/B 1/11 80C 300V FT1, UV OIL AND WATER RESISTANT |
| INGRESS PROTECTION | IP67 & IP69K |
| TEMPERATURE RATING | -20°... +105°C (-4°... +221°F) |

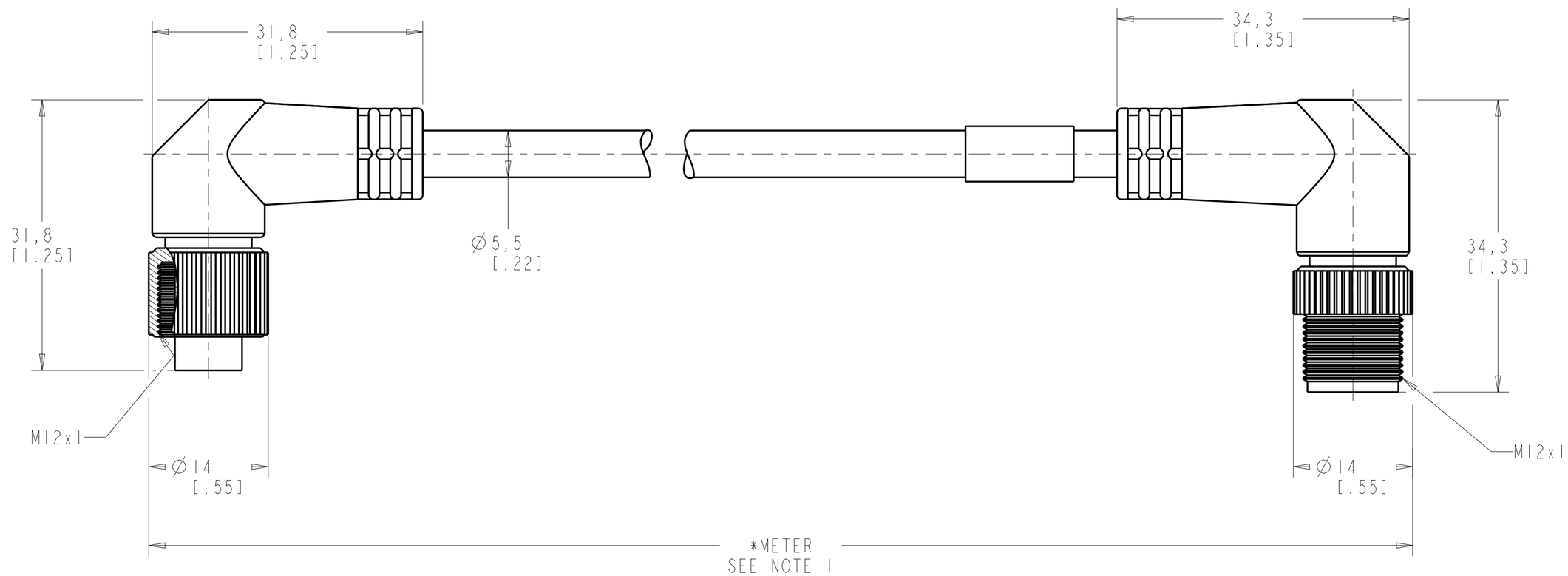


DIMENSIONS & INFORMATION SHOWN ARE FOR REFERENCE ONLY AND FOR LATEST UPDATE PLEASE REFER http://www.ab.com/catalogs/

NOTES:
1. (*) REPRESENTS THE CABLE LENGTH IN METERS.
2. ALL DIMENSIONS ARE IN MM [INCHES] UNLESS AND OTHERWISE SPECIFIED.

Rockwell Automation

CONFIDENTIAL AND PROPRIETARY INFORMATION.
THIS DOCUMENT CONTAINS CONFIDENTIAL AND PROPRIETARY INFORMATION OF ROCKWELL AUTOMATION, INC. AND MAY NOT BE USED, COPIED OR DISCLOSED TO OTHERS, EXCEPT WITH THE AUTHORIZED WRITTEN PERMISSION OF ROCKWELL AUTOMATION, INC.

889D-R3GCDE-*

Drawn by: LNT | Date: 12/4/2013

Sheet 1 Of 1

| Size | | Ver |
|---|---|---|
| C | 889D-R3GCDE-* | 0.0 |