RIGHT ANGLE FEMALE END VIEW	RIGHT ANGLE MALE END VIEW
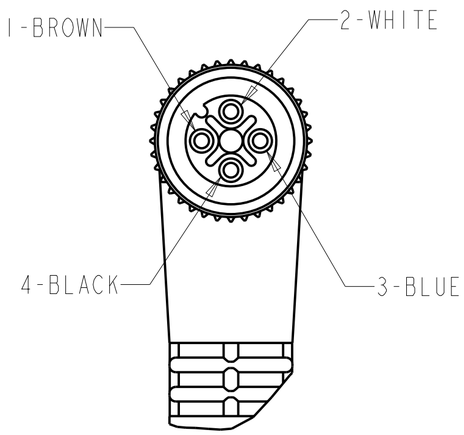	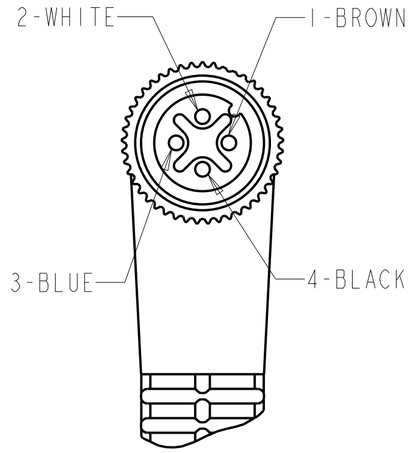
4-PIN, M12 RIGHT ANGLE FEMALE CONNECTOR	4-PIN, M12 RIGHT ANGLE MALE CONNECTOR

SPECIFICATIONS

CERTIFICATIONS	RoHS, cULus, CSA, cURus???
COUPLING NUT MATERIAL	EPOXY-COATED ZINC
CONNECTOR OVERMOLD MATERIAL	OIL RESISTANT PUR
CONTACT PLATING	GOLD OR GOLD FLASH OVER PALLADIUM-NICKEL
CONTACT MATERIAL	BRASS OR COPPER ALLOY
CABLE TYPE	PVC, 18AWG, 300V
CABLE JACKET COLOR	GRAY
BEND RADIUS	10 X DIAMETER
NUMBER OF CONDUCTORS [AWG]	4x18 AWG
SHIELDING	UNSHIELDED
CABLE RATING	UL PLTC AWM STYLE 2661 VW-1 105C 300V, CSA AWM A/B I/II 80C 300V FT1, UV OIL AND WATER RESISTANT
INGRESS PROTECTION	IP67 & IP69K
TEMPERATURE RATING	-20°... +105°C (-4°... +221°F)

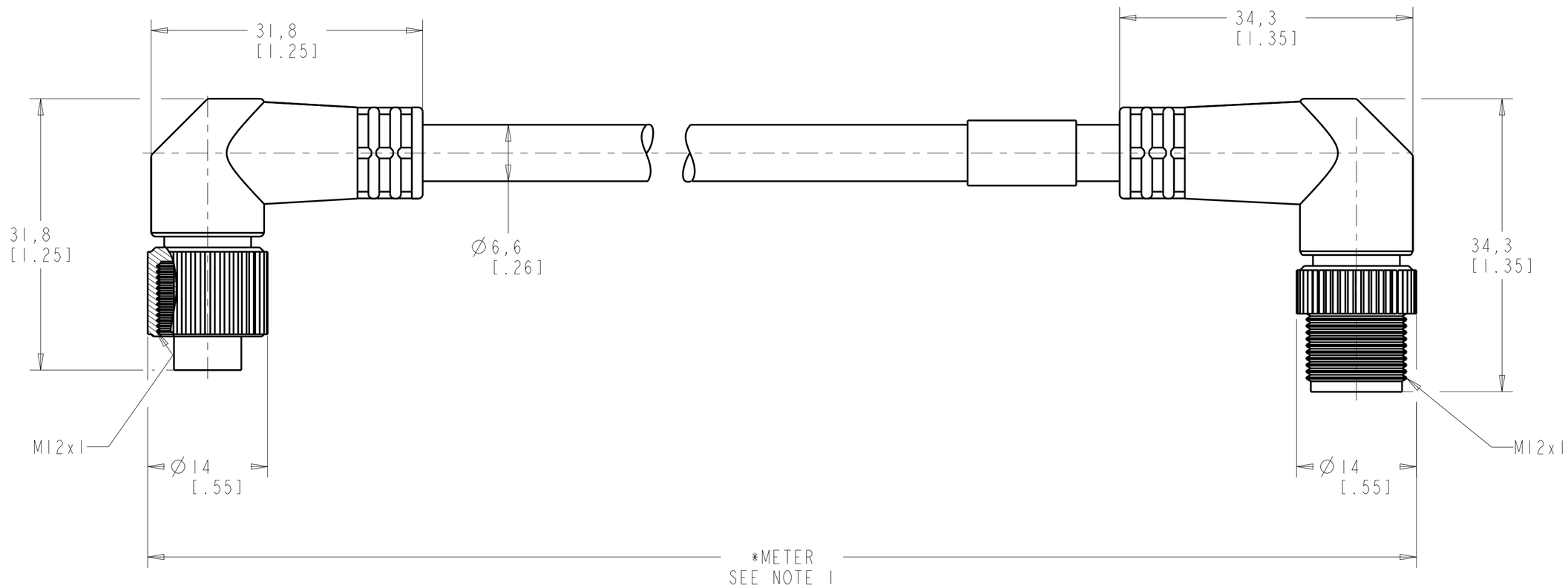

DIMENSIONS & INFORMATION SHOWN ARE FOR REFERENCE ONLY AND FOR LATEST UPDATE PLEASE REFER http://www.ab.com/catalogs/

NOTES:
1. (*) REPRESENTS THE CABLE LENGTH IN METERS.
2. ALL DIMENSIONS ARE IN MM [INCHES] UNLESS AND OTHERWISE SPECIFIED.

Rockwell Automation

CONFIDENTIAL AND PROPRIETARY INFORMATION.
THIS DOCUMENT CONTAINS CONFIDENTIAL AND PROPRIETARY INFORMATION OF ROCKWELL AUTOMATION, INC. AND MAY NOT BE USED, COPIED OR DISCLOSED TO OTHERS, EXCEPT WITH THE AUTHORIZED WRITTEN PERMISSION OF ROCKWELL AUTOMATION, INC.

Sheet 1 Of 1

889D-R4GEDE-*

Drawn by: LNT | Date: 12/4/2013

Size		Ver
C	889D-R4GEDE-*	0.0