RIGHT ANGLE FEMALE END VIEW

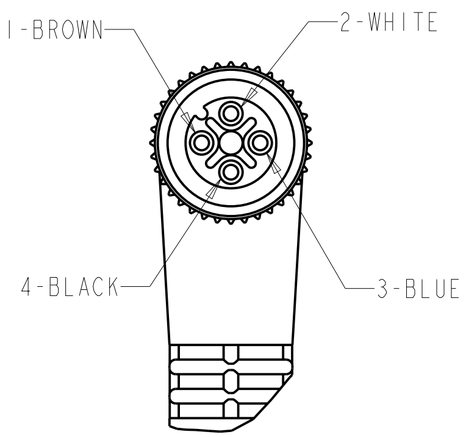

4-PIN, M12
RIGHT ANGLE FEMALE CONNECTOR

RIGHT ANGLE MALE END VIEW

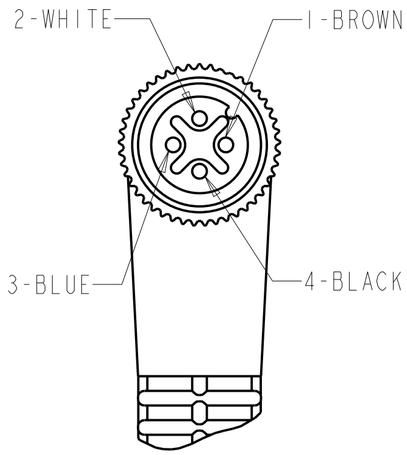

4-PIN, M12
RIGHT ANGLE MALE CONNECTOR

SPECIFICATIONS

CERTIFICATIONS	UL RECOGNIZED AND CSA CERTIFIED
COUPLING NUT MATERIAL	EPOXY-COATED ZINC
CONNECTOR OVERMOLD MATERIAL	OIL RESISTANT PUR
CONTACT PLATING	GOLD OR GOLD FLASH OVER PALLADIUM-NICKEL
CONTACT MATERIAL	BRASS OR COPPER ALLOY
CABLE TYPE	CPE, 18AWG, 300V
CABLE JACKET COLOR	YELLOW
BEND RADIUS	10 X DIAMETER
NUMBER OF CONDUCTORS [AWG]	4x18 AWG
SHIELDING	UNSHIELDED
CABLE RATING	UL-50C SJOOW 90C DRY AND 60C WATER RESISTANT, CSA-50C SJOOW 90C FT1
INGRESS PROTECTION	NEMA 6P, 1200 PSI (8270 kPa) WASHDOWN, IP69K
TEMPERATURE RATING	-50°... +105°C (-58°... +221°F)

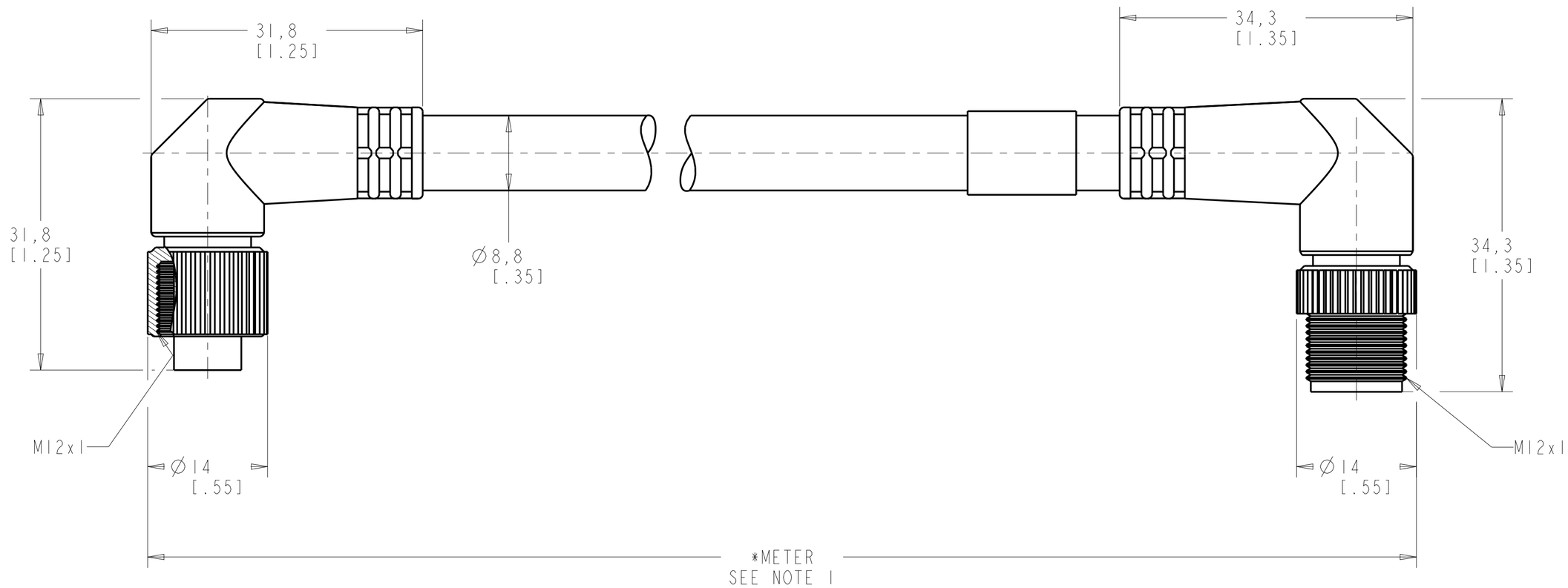

DIMENSIONS & INFORMATION SHOWN ARE FOR REFERENCE ONLY AND FOR LATEST UPDATE PLEASE REFER http://www.ab.com/catalogs/

NOTES:
1. (*) REPRESENTS THE CABLE LENGTH IN METERS.
2. ALL DIMENSIONS ARE IN MM [INCHES] UNLESS AND OTHERWISE SPECIFIED.

Rockwell Automation

CONFIDENTIAL AND PROPRIETARY INFORMATION.
THIS DOCUMENT CONTAINS CONFIDENTIAL AND PROPRIETARY INFORMATION OF ROCKWELL AUTOMATION, INC. AND MAY NOT BE USED, COPIED OR DISCLOSED TO OTHERS, EXCEPT WITH THE AUTHORIZED WRITTEN PERMISSION OF ROCKWELL AUTOMATION, INC.

Sheet 1 Of 1

889D-R4WEDE-*

Drawn by: LNT | Date: 11/14/2013

Size: C | 889D-R4WEDE-* | Ver: 0.0