MALE END VIEW	RIGHT ANGLE FEMALE END VIEW
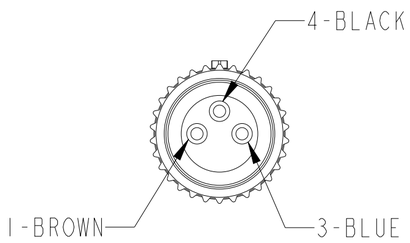	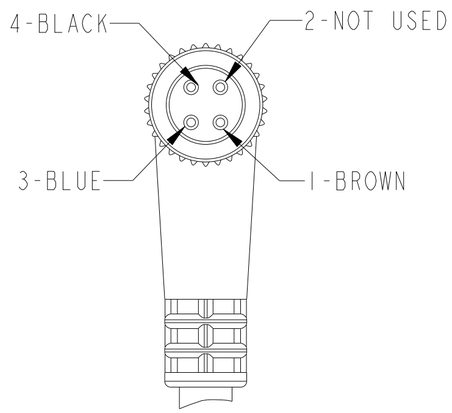
3-PIN, M8 X 1 STRAIGHT MALE CONNECTOR	4-PIN, M8 X 1 RIGHT ANGLE FEMALE CONNECTOR

SPECIFICATIONS

CERTIFICATIONS	UL RECOGNIZED AND CSA CERTIFIED
COUPLING NUT MATERIAL	NICKEL-PLATED BRASS
CONNECTOR OVERMOLD MATERIAL	OIL-RESISTANT PUR
CONTACT PLATING	GOLD OVER NICKEL-PLATED BRASS
CONTACT MATERIAL	BRASS OR COPPER ALLOY
CABLE TYPE	PVC, 24AWG, 300V
CABLE JACKET COLOR	YELLOW
BEND RADIUS	10 X DIAMETER
NUMBER OF CONDUCTORS [AWG]	3X24 AWG (PICO MALE), 4X24 AWG (PICO FEMALE)
SHIELDING	UNSHIELDED
CABLE RATING	UL CM AWM STYLE 2661 VW-1 105C 300V, CSA AWM A/B 1/11 105C 300V FT1
INGRESS PROTECTION	IP67
TEMPERATURE RATING	-20°... +105°C (-4°... +221°F)

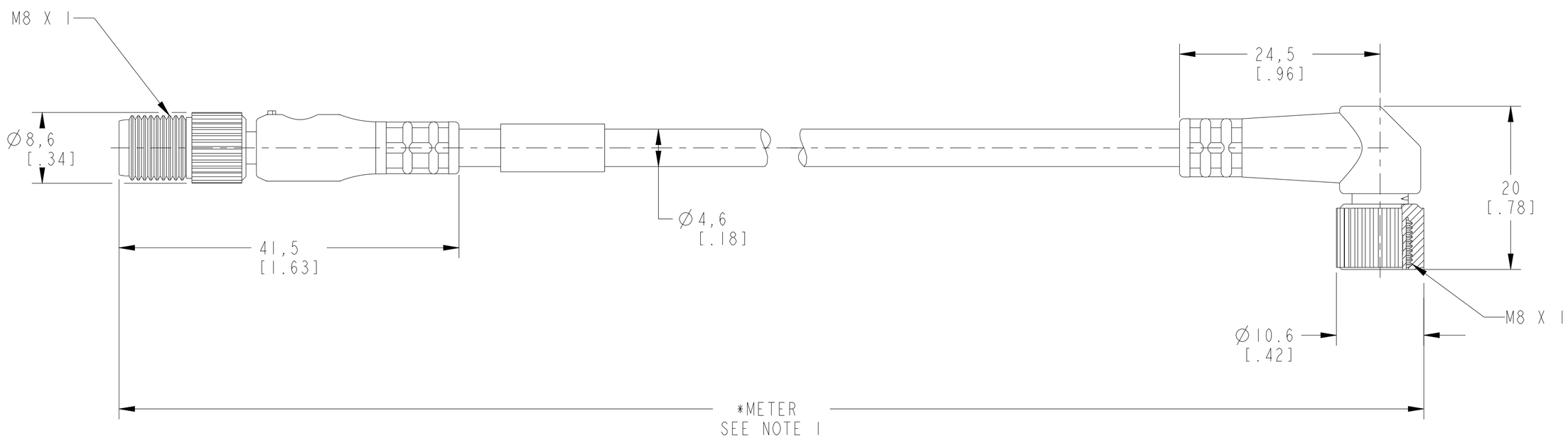

DIMENSIONS & INFORMATION SHOWN ARE FOR REFERENCE ONLY AND FOR LATEST UPDATE PLEASE REFER http://www.ab.com/catalogs/

NOTES:
1. (*) REPRESENTS THE CABLE LENGTH IN METERS.
2. ALL DIMENSIONS ARE IN MM [INCHES] UNLESS AND OTHERWISE SPECIFIED.

Rockwell Automation

CONFIDENTIAL AND PROPRIETARY INFORMATION.
THIS DOCUMENT CONTAINS CONFIDENTIAL AND PROPRIETARY INFORMATION OF ROCKWELL AUTOMATION, INC. AND MAY NOT BE USED, COPIED OR DISCLOSED TO OTHERS, EXCEPT WITH THE AUTHORIZED WRITTEN PERMISSION OF ROCKWELL AUTOMATION, INC.

889P-R4ABP3M-*

Sheet 1 Of 1

Drawn by: LNT | Date: 03-12-2015

Size		Ver
C	889P-R4ABP3M-*	0.0