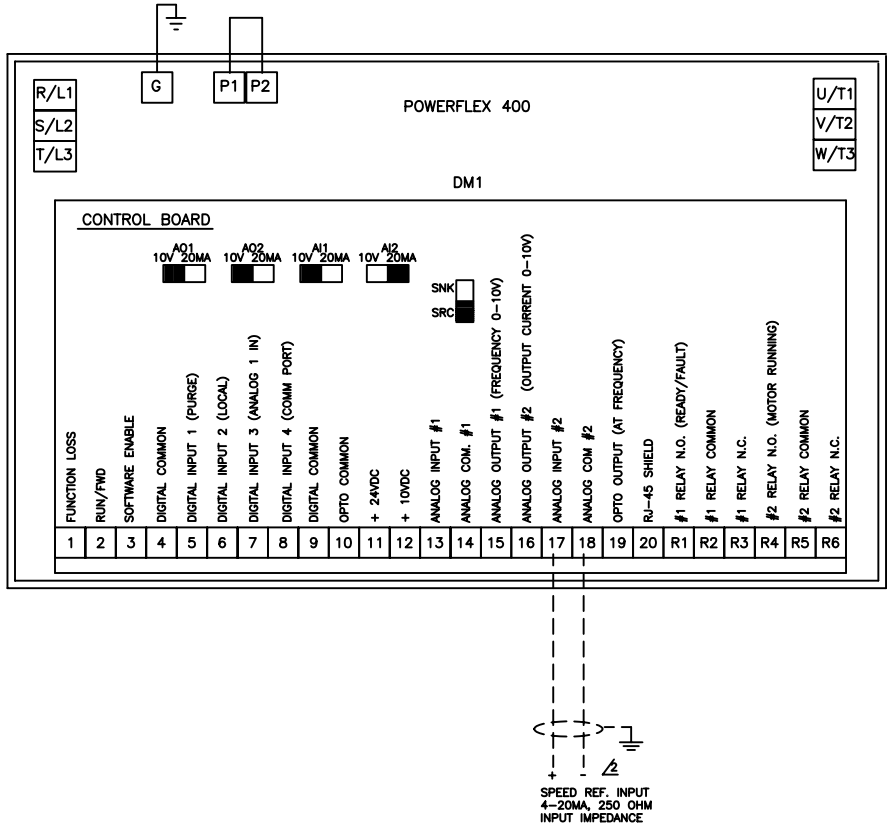

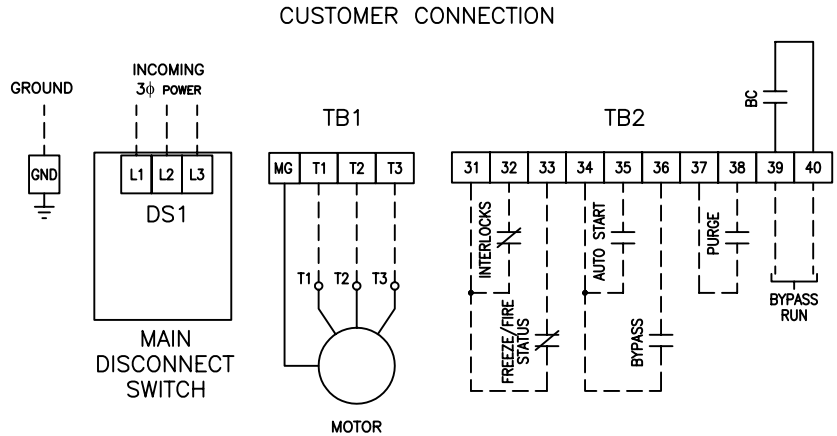

1 OPENING OF THE FREEZE/FIRE INTERLOCK WILL REQUIRE MANUAL RESET.

2 WHEN IN "AUTO MODE" SPEED REFERENCE WILL COME FROM 4-20ma SOURCE WIRED TO ANALOG INPUT #2. IF 0-10V SOURCE IS TO BE USED, CHANGE PARAMETER T73 TO "2" VOLTAGE MODE AND SET DIP SWITCH "AI2" TO 10V.

— — CONNECTIONS SUPPLIED BY CUSTOMER

DATE	BY	APPROVAL
		DESIGN REVIEW
		FOR MANUFACTURING
		AS SHIPPED
		AS COMMISSIONED

REV.	DATE	BY	ECN/CR. NO.
A	11/14/06	REH	

Rockwell Automation

THIS DRAWING IS THE PROPERTY OF ROCKWELL AUTOMATION, INC. OR ITS SUBSIDIARIES AND MAY NOT BE COPIED, USED OR DISCLOSED FOR ANY PURPOSE EXCEPT AS AUTHORIZED IN WRITING BY ROCKWELL AUTOMATION, INC.

TITLE
INTER-CONNECT DRAWING - PF400, STYLE B
3-50HP @ 208VAC, 3-150HP @ 460VAC
NEMA 3R, 4, 12

DR. BY JRF/ACI	CHK. BY JCL/ACI	ENG. JFH/ACI	DWG. NO.	NEXT SH.	SH. NO.
DATE 11/23/06	DATE 02/17/06	DATE 11/23/06	97D01549-	1	1