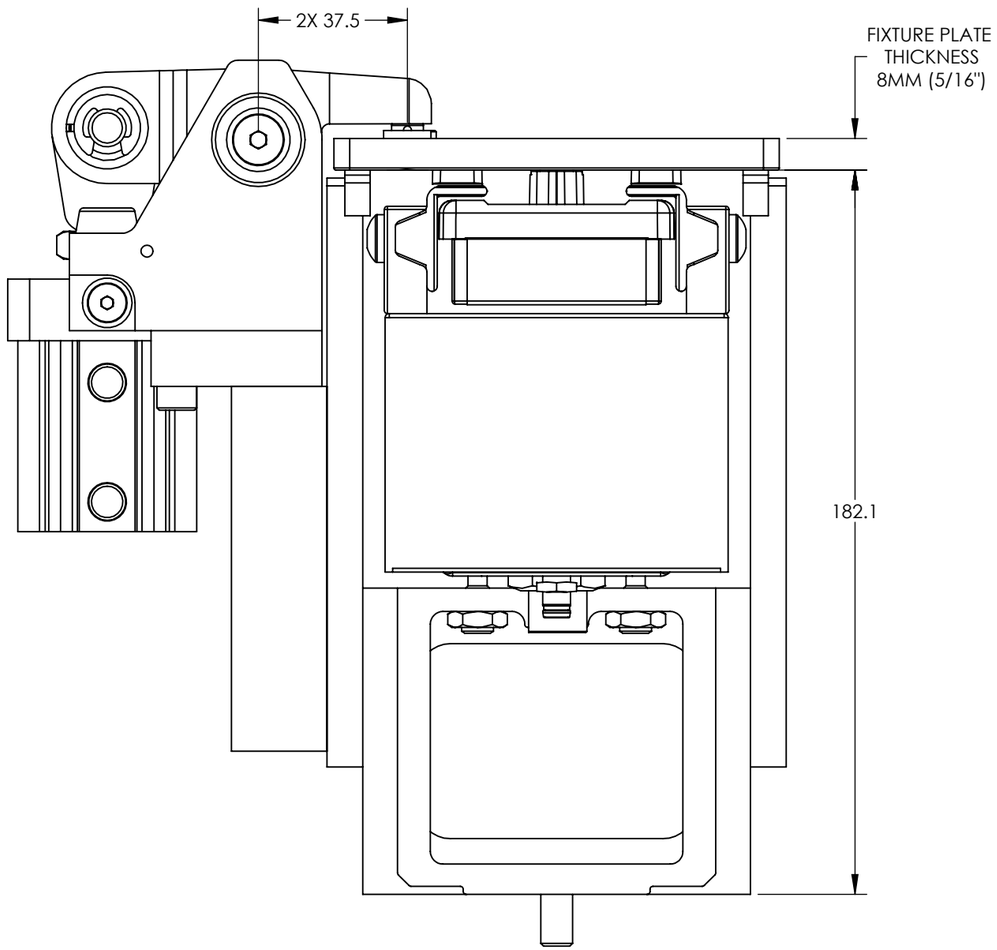

SHROUD HIDDEN

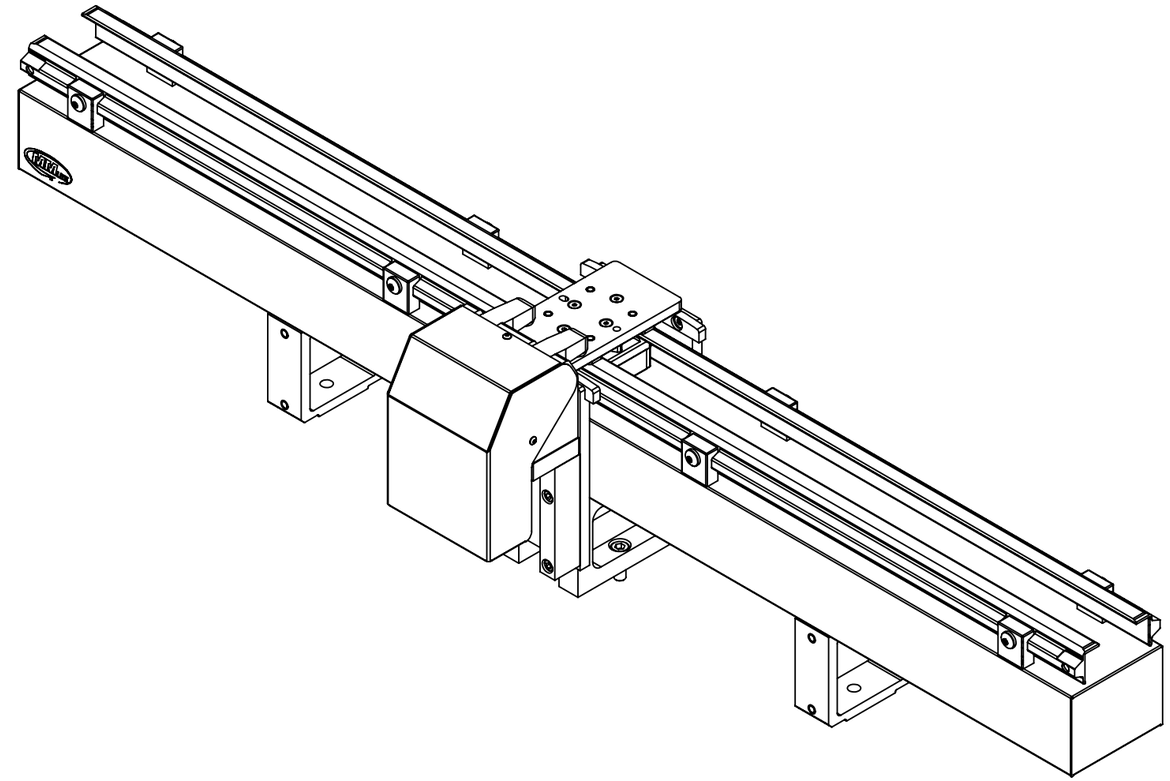

NOTES:

1. ALL DIMENSIONS ARE NOMINAL

2 - ADDED SHROUD TO ISO VIEW & UPDATED TITLE

UNLESS OTHERWISE SPECIFIED		
ALL DIMENSIONS IN MM	SURFACE FINISH	TOLERANCES
BREAK ALL SHARP EDGES	[63] 1.6	X.XX ± 0.13
CLEAN AND DEBURR		X.X ± 0.25
USE MIN BEND RADII		X. ± 0.5
		DEG ± 0.5°
		TORQUE ± 25%

MAGNEMOTION CONFIDENTIAL
Copyright© 2015 MagneMotion Inc.
The information contained in this drawing is the sole property of MagneMotion Inc. Any reproduction in part or whole without the written permission of MagneMotion is prohibited

INTERPRET DRAWING PER ANSI Y14.5M-1982

DO NOT SCALE DRAWING	SHEET SIZE B	THIRD-ANGLE PROJECTION	PROJECT ML	DATE 2015-12-03
CAD PKG. SolidWorks 2015	SCALE 1:10		ENGINEER J.MENDENHALL	DRAWN BY J.MENDENHALL
CAD FILE 990000748.SLDDRW				

MagneMotion Inc.
139 Barnum Road
Devens, MA 01434 USA
(978) 757-9100

CAGE CODE 1LR11

TITLE PRECISION LOCATOR ICD

REV 2

MATERIAL -

DWG NO. 990000748

SHEET 1 OF 1