Rockwell Automation

Allen-Bradley

Product Information Packet

Rockwell Automation

CM227-BK00218AXZCA

2HP,1800RPM,3PH,60HZ,145TC,TENV

Copyright © All product information within this document is subject to Rockwell Automation © protection,unless otherwise noted.

CM227-BK00218AXZCA

Model # Y987

Motor Family	CM227 - NEMA Frame Inverter Brake Motor
Torque Speed	CT 1000:1 w/ Encoder (120:1 w/out) Speed Range
Enclosure Code	NV (Totaly Enclosed Non-Ventilated)

Horsepower	2	Load Type	Direct Coupled
Temp Rating	40 C	Mount Type	C-Face Flange w/ Feet
Insulation	F	Start Type	Inverter Only
Duty	Continuous	Design	A
Frame	145TC		

Voltage	3PH / 60Hz / 230/460V	☐ Usable at 208V	
Base Speed	1800 RPM	Amps	6 / 3
CHP Speed	3600 RPM	Max Speed	
Conduit Box Location	F1	Service Factor	1.0
Bearing Type:	Ball	ODE Bearing	6205
Grease	Standard	DE Bearing	6205

Performance Data:

% of Rated Load	Efficiency	Power Factor	Amps
No Load			3.4 / 1.7
1/2 Load	82	53.5	
3/4 Load	84	66	
Full Load	85.5	78	6 / 3

Hazardous Location	
Division	
Class	
Group	
Temp Code	

OPTIONS

☐ Encoder	PPR		☐ Tachometer	Tach Voltage	
☐ Heater	Blower Voltage				
☐ Holding Brake	Ft. Lbs		Coil Voltage		☐ Thermostats
☐ Winding RTD'S	☐ Bearing RTD'S	Ohms		Type	

104965

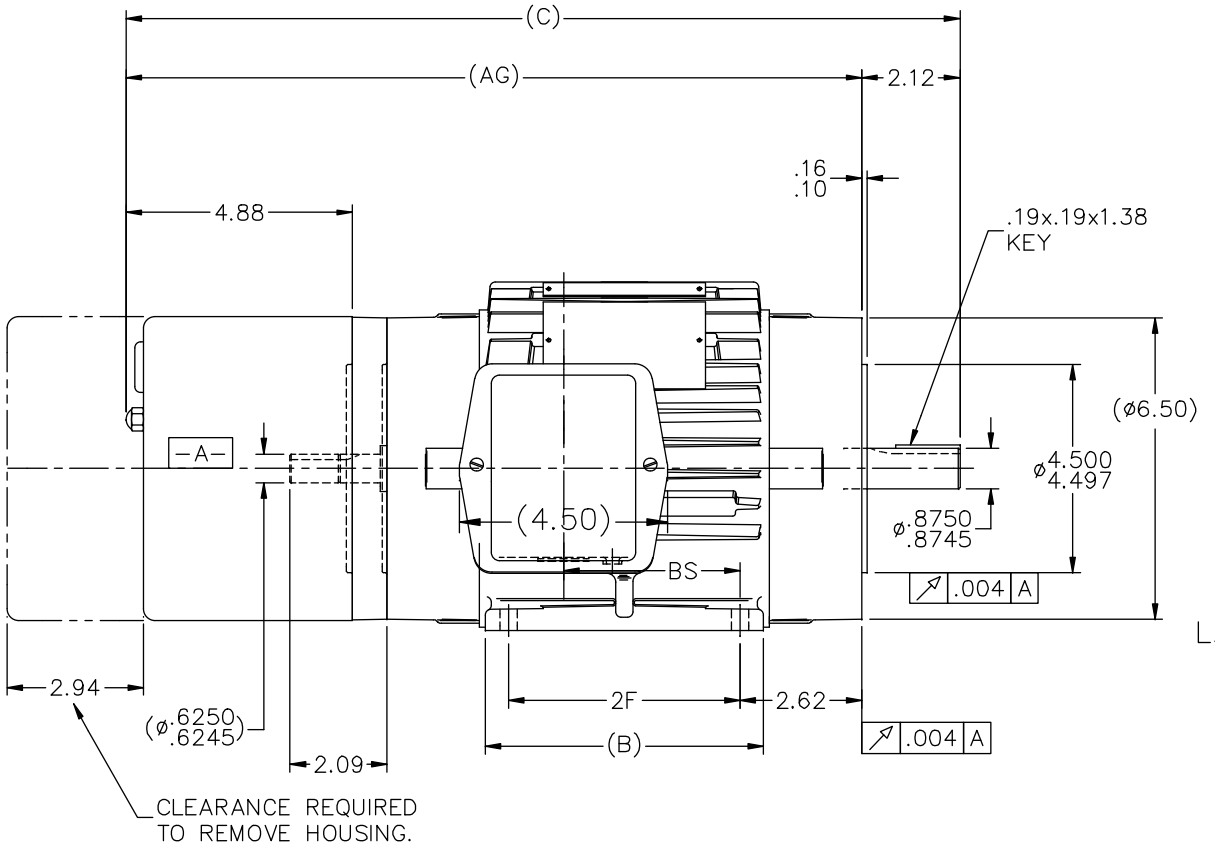

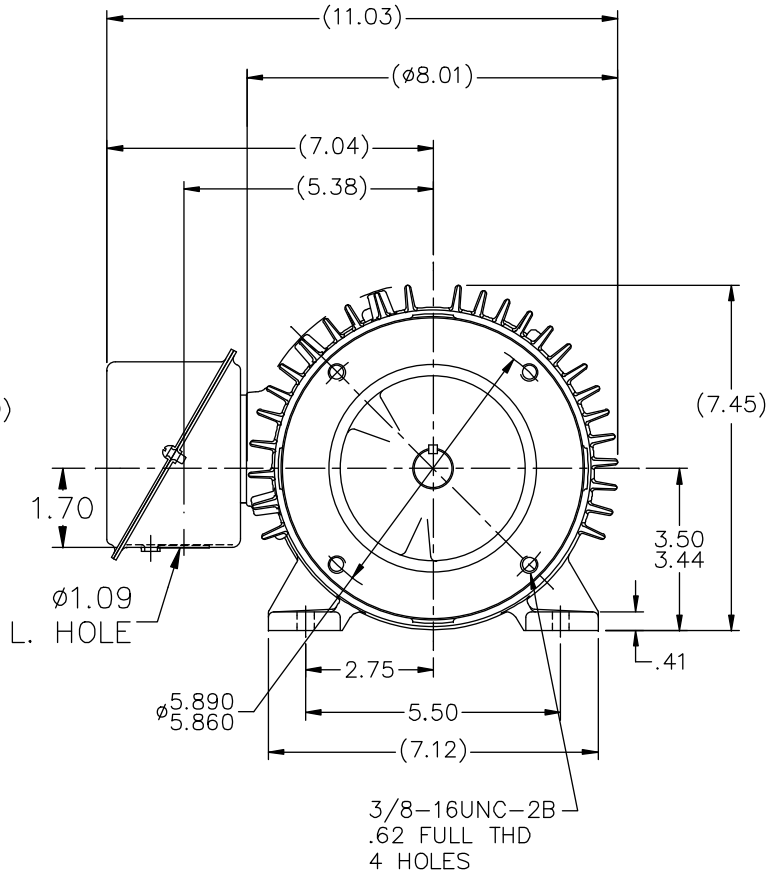

NOTES:
1- BOX CAN BE ROTATED IN 90° STEPS.
2- BOX CAN BE MOUNTED ON OPPOSITE SIDE BY REMOVING BRACKETS AND TURNING FRAME 180°.
3- NAMEPLATE READ FROM CONDUIT BOX SIDE.

DASH	FRAME	C	AG	B	2F	BS
625	145T	18.00	15.88	6.00	5.00	3.81

NO.	REVISION	BY & DATE	CHK
5	CORRECTED COND BOX VIEW PER ECR-0044247	UD 12-10-13	AB
4	REDRAWN IN AUTOCAD	TAT 06-24-2005	DRS
3	REVISED TO SHOW ADAPTER B-92093A, AND REMOVED IF USED NOTE CN 31288	NJS 08-31-2001	
2	UPDATED SHAFT EXTENSION ON O.D.E AND ADDED ADAPTER NOTE	DRS 08-17-2001	

TOLERANCES UNLESS SPECIFIED

DEC.	INCHES
.X	±.1
.XX	±.03
.XXX	±.005
.XXXX	±.0005
ANG	±7'30"

Rockwell Automation
Allen-Bradley

TITLE OUTLINE - C' FACE - TS - TENV 140T FR.-BRAKE & PROVISIONS FOR TACH.

MAT'L.
FINISH
CAD FILE 104965

DRAWN DRS 05-24-2001
CHK ML 06-19-2001
APPD GK 06-19-2001
SCALE 3=8
REF
FMF
PREV

SIZE B | DRAWING NO. 104965 | PAGE OF | REV. 5

RFP
DIST WP

THIS DRAWING IN DESIGN AND DETAIL IS OUR PROPERTY AND MUST NOT BE USED EXCEPT IN CONNECTION WITH OUR WORK ALL RIGHTS OF DESIGN AND INVENTION ARE RESERVED
THIS IS AN ELECTRONICALLY GENERATED DOCUMENT - DO NOT SCALE THIS PRINT

12/11/2013 1:00:32 AM - Converted by Connexus

EE7308T

THREE PHASE DUAL VOLTAGE MOTOR

HIGH VOLTAGE

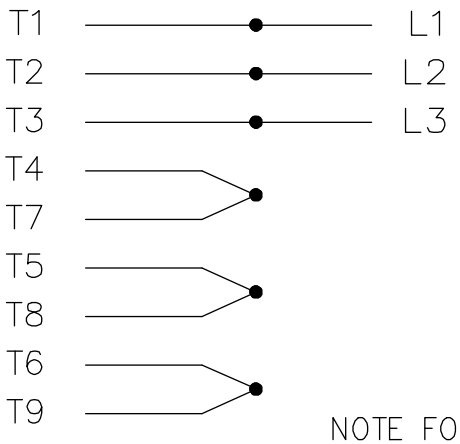

NOTE FOR FACTORY USE ONLY:
TO SURGE TEST FOR COMMON CONNECT:
HIGH VOLT: CONNECT P1 TO T1
THEN P2 TO L1
LOW VOLT: CONNECT P1 TO T1 & T7,
THEN P2 TO L1

LOW VOLTAGE

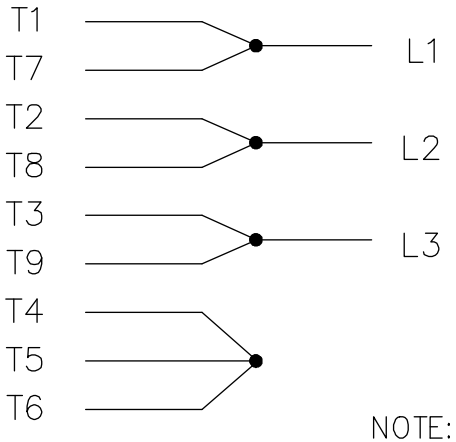

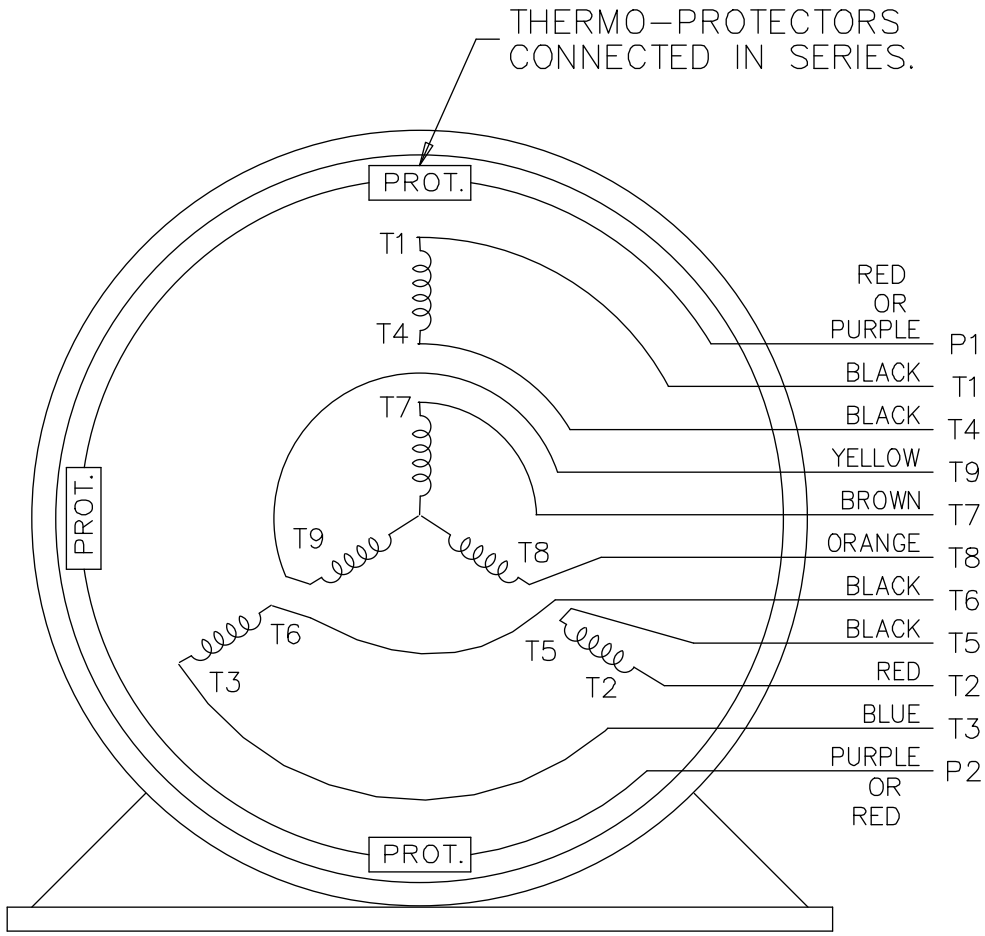

VIEW OF TERMINAL END

NOTE: LEAD'S COLOR CAN BE YELLOW OR WHITE FOR MT2 PLANT

NO.	REVISION	BY & DATE	CHK
13	NOTE ADDED	GR 06/20/13	AK
12	P1 & P2 LEADS ADD'T COLOUR ADDED	UD 12/19/12	SR
11	ADDED COLORS TO "T & P" LEADS CN 40494	MSG 08-08-2006	ML
10	ADDED SURGE TESTER NOTE – FOR FACTORY USE ONLY		
	CN 24255	MH 06-03-1997	
9	REDRAWN	SMC 05-15-1992	

TOLERANCES UNLESS SPECIFIED

DEC.	INCHES
.X	±.1
.XX	±.02
.XXX	±.005
.XXXX	±.0005
ANG	±7'30"

Rockwell Automation
Allen-Bradley

TITLE CONNECTION DIAGRAM
3 PHASE – DUAL VOLTAGE MOTOR

MAT'L.
FINISH
CAD FILE EE7308T
RFP
DIST WP

DRAWN	SMC	05-13-1992
CHK	ML	05-13-1992
APPD	TB	05-13-1992
SCALE	1=1	
REF		
FMF		
PREV		

SIZE A
DRAWING NO. EE7308T
PAGE OF
REV. 13

THIS DRAWING IN DESIGN AND DETAIL IS OUR PROPERTY AND MUST NOT BE USED EXCEPT IN CONNECTION WITH OUR WORK ALL RIGHTS OF DESIGN AND INVENTION ARE RESERVED
THIS IS AN ELECTRONICALLY GENERATED DOCUMENT – DO NOT SCALE THIS PRINT

6/20/2013 7:53:25 AM - Converted by Connexus