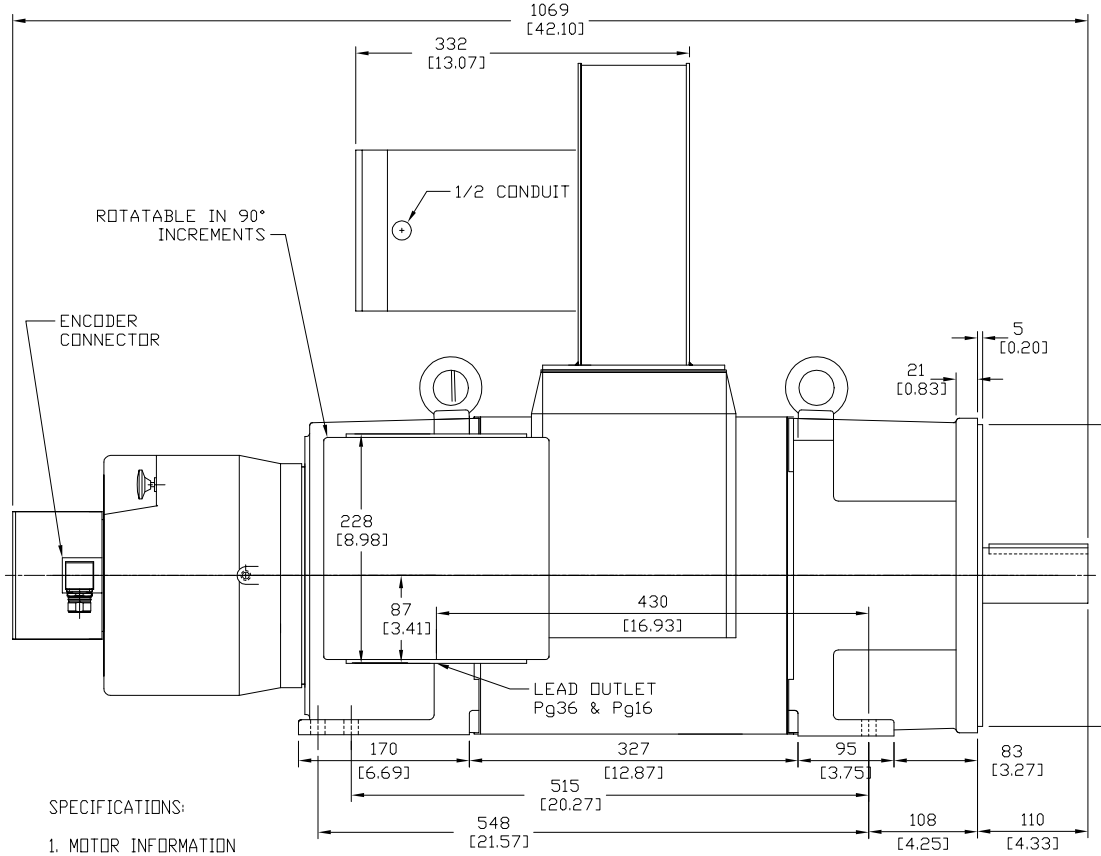

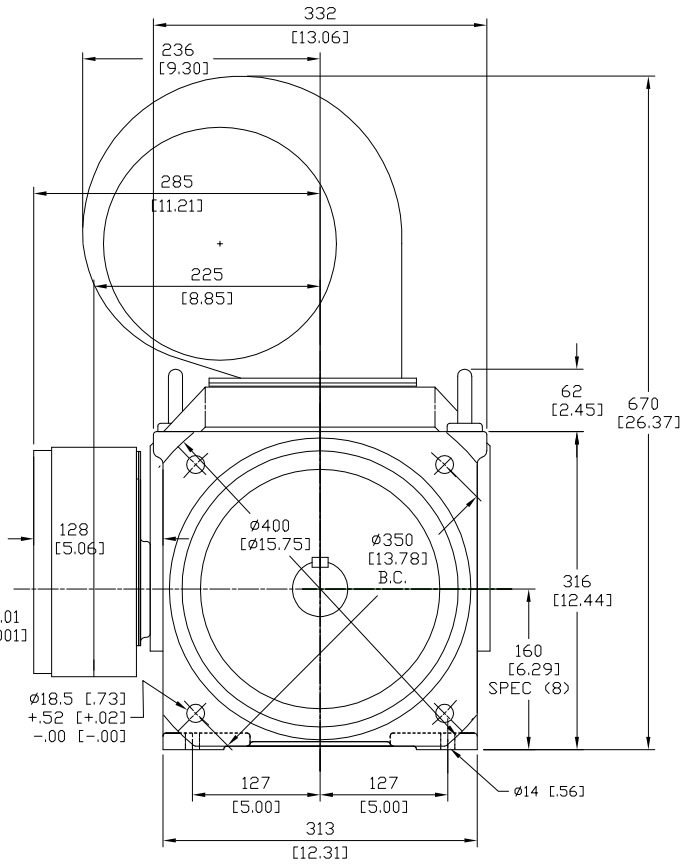

SPECIFICATIONS:

1. MOTOR INFORMATION
   MOTOR TYPE: VARIABLE SPEED AC
   FRAME SIZE: RDL1613Y
   RATING: 41.7 KW
   VOLTAGE: 400
   ENCLOSURE: TOTALLY ENCLOSED IP54
   MOUNTING: FLANGE (350mm BOLT CIRCLE)
   COOLING: BLOWER COOLED IC416
   DRIVE METHOD: COUPLED OR BELTED
   ACCESSORIES: ENCODER & BRAKE
2. CONTINUOUS STALL TORQUE: 271 Nm
   MAX AT 155°C WINDING TEMPERATURE, IN A 40°C AMBIENT
3. OPERATING SPEED: 1500 BASE SPEED / 3000 RPM MAX.
4. 1024 SINUSOID/REV ENCODER, WITH MULTI-TURN ABSOLUTE POSTION DATA
5. FOR ADDITIONAL SPECIFICATIONS SEE 10000000330
6. SHAFT HEIGHT WILL NOT BE EXCEEDED SHIMS UP TO 0.5 MM IN THICKNESS USUALLY REQUIRED FOR COUPLED OR GEARED MACHINES.
7. SHAFT EXTENSIONS ARE ACCORDING TO DIN 748, TOLERANCES ARE BASED ON THE ISA FITTING SYSTEM USING k6 FOR DIAMETERS UP TO 50MM AND m6 FOR DIAMETERS ABOVE.
8. MAX SHAFT TIR .06 [.002]
   MAX FACE TIR .13 [.005]
9. MOTOR WEIGHT 305 KG. [672 LBS] (MAY VARY 15%)
10. BRAKE: 400VAC 20 Nm MAX. HOLDING TORQUE, BRAKE RELEASES WHEN VOLTAGE APPLIED

BLOWER CONNECTION	
SERIES	
LEAD	400 VOLTS
T1	L1
T2	L2
T3	L3
T4	
T5	
T6	
T7	
T8	
T9	
PARALLEL	
LEAD	200 VOLTS
T1	L1
T2	L2
T3	L3
T4	
T5	
T6	
T7	
T8	
T9	

PIN-OUT	
ENCODER CONNECTOR	
PIN	FUNCTION
A	SIN +
B	SIN -
C	COS +
D	COS -
E	DATA +
F	DATA -
G-M	-
N	+9 VDC
P	COM
R	TS +
S	TS -
T-V	-

MOTOR CONNECTION	
TERMINAL BOX	
LEAD	SOURCE
U1	L1
V1	L2
W1	L3
GREEN	GROUND

BRAKE CONNECTION	
460 V 1 PHASE	
LEAD	SOURCE
B1	L1
B2	L2

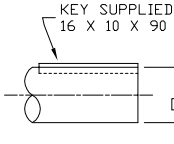

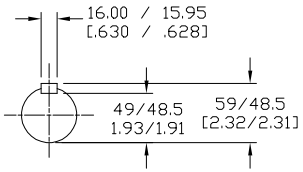

DRIVE END
SHAFT DETAIL
SPEC (9)

SUPPLIER PART NUMBER: L16M5272

NOTE: ALL DRAWING MODIFICATIONS REQUIRE CUSTOMER APPROVAL

REFERENCES		DESCRIPTION	CAD DOCUMENT
VERSION/ CHANGE NUMBER	TOLERANCES UNLESS OTHERWISE SPECIFIED DO NOT SCALE DRAWING DIMENSIONS ARE IN MILLIMETERS WITH INCHES REFERENCED [X] UNTOLERANCED DIMENSIONS ARE REFERENCETHIRD ANGLE PROJECTION	HPK-E1613C-MB44AA,ESM	Allen-Bradley Rockwell Automation
		DR. AMB / DATE 09-19-06	SHEET 1 OF 1
		DXF FILE AVAILABLE	DWG. SIZE B / DOCUMENT NUMBER 10000000350