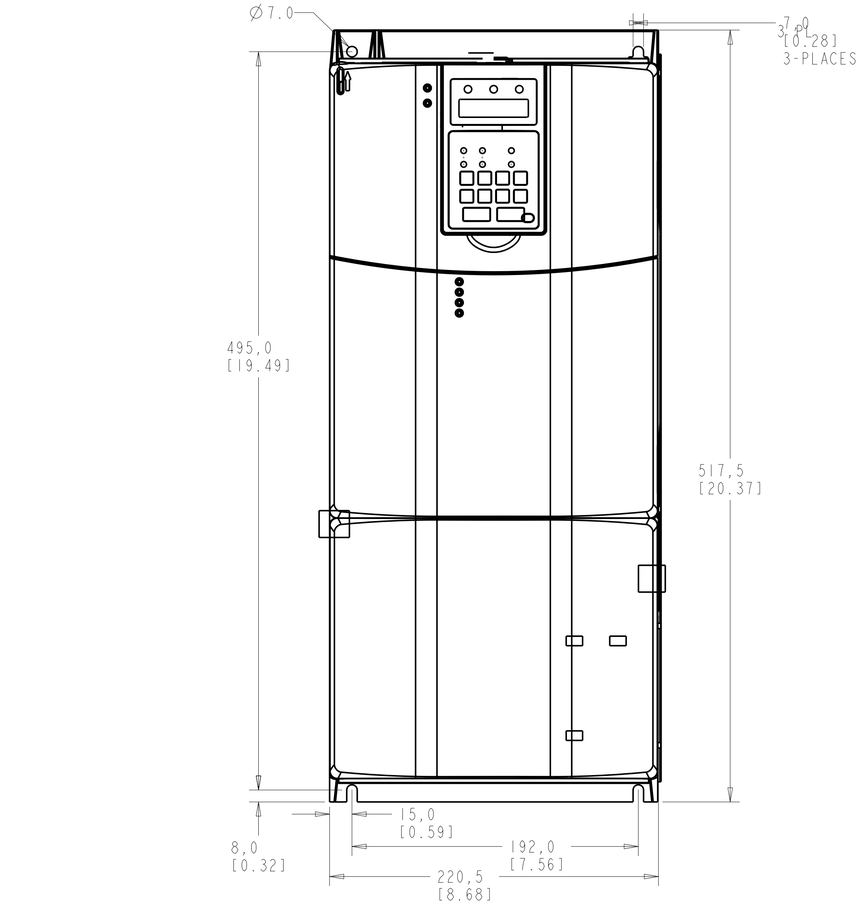

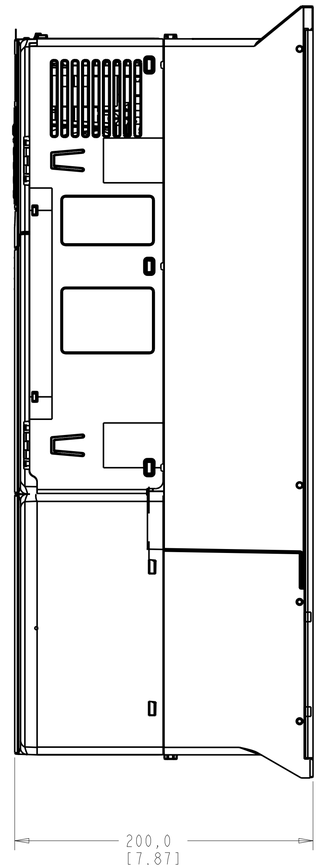

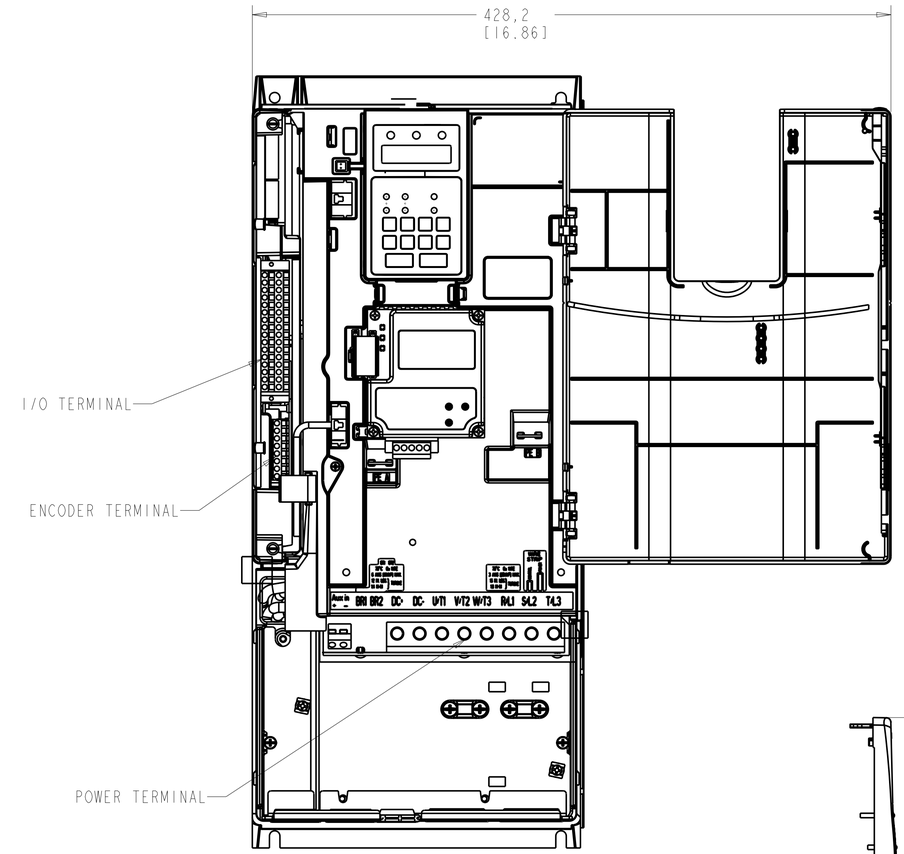

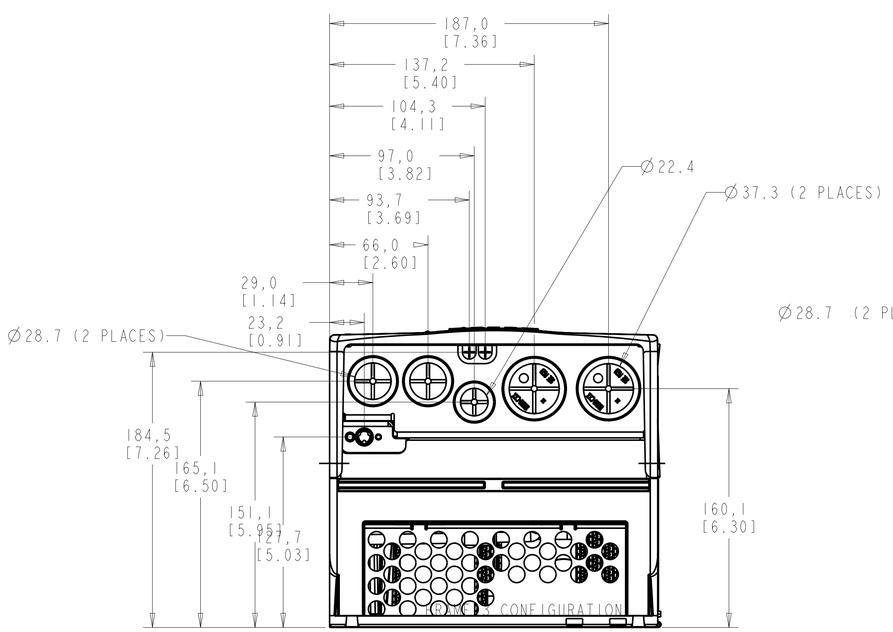

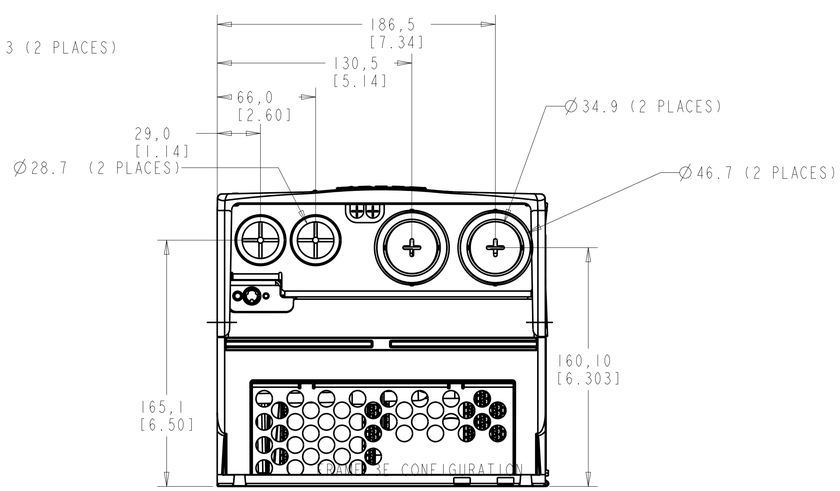

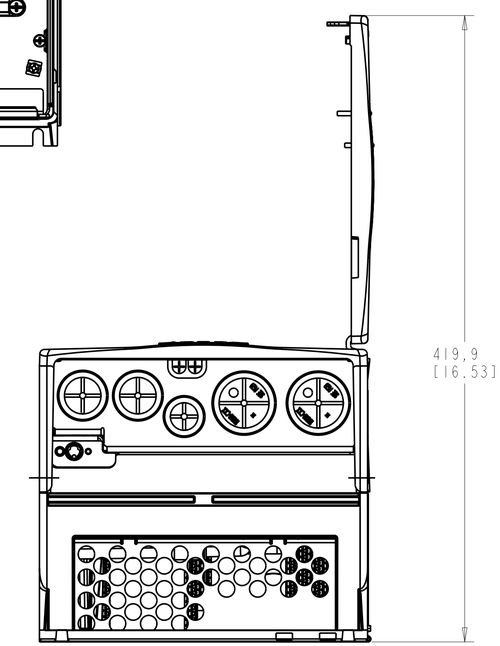

Rockwell Automation

PF700 FRAME 3
GEN III

Drawn by: CDSWOVER | Date: 03-01-11

CONFIDENTIAL AND PROPRIETARY INFORMATION.
THIS DOCUMENT CONTAINS CONFIDENTIAL AND PROPRIETARY INFORMATION OF ROCKWELL AUTOMATION, INC. AND MAY NOT BE USED, COPIED OR DISCLOSED TO OTHERS, EXCEPT WITH THE AUTHORIZED WRITTEN PERMISSION OF ROCKWELL AUTOMATION, INC.

Sheet 1 Of 1

Size		Ver
D	195264-6	04