NOTES

1. REFER TO DRIVE USER MANUAL FOR APPLICATION DATA.
2. UNIT SHORT CIRCUIT CURRENT RATING CAN BE FOUND ON THE ONE-LINE (WHERE APPLICABLE) OR ON THE UNIT NAMEPLATE.
3. DOOR MOUNTED COMPONENTS
4. THIS SOURCE PROVIDES AUXILIARY POWER TO THE CONTROL POD AND OTHER CONTROL CIRCUITS WHEN MAIN POWER HAS BEEN REMOVED

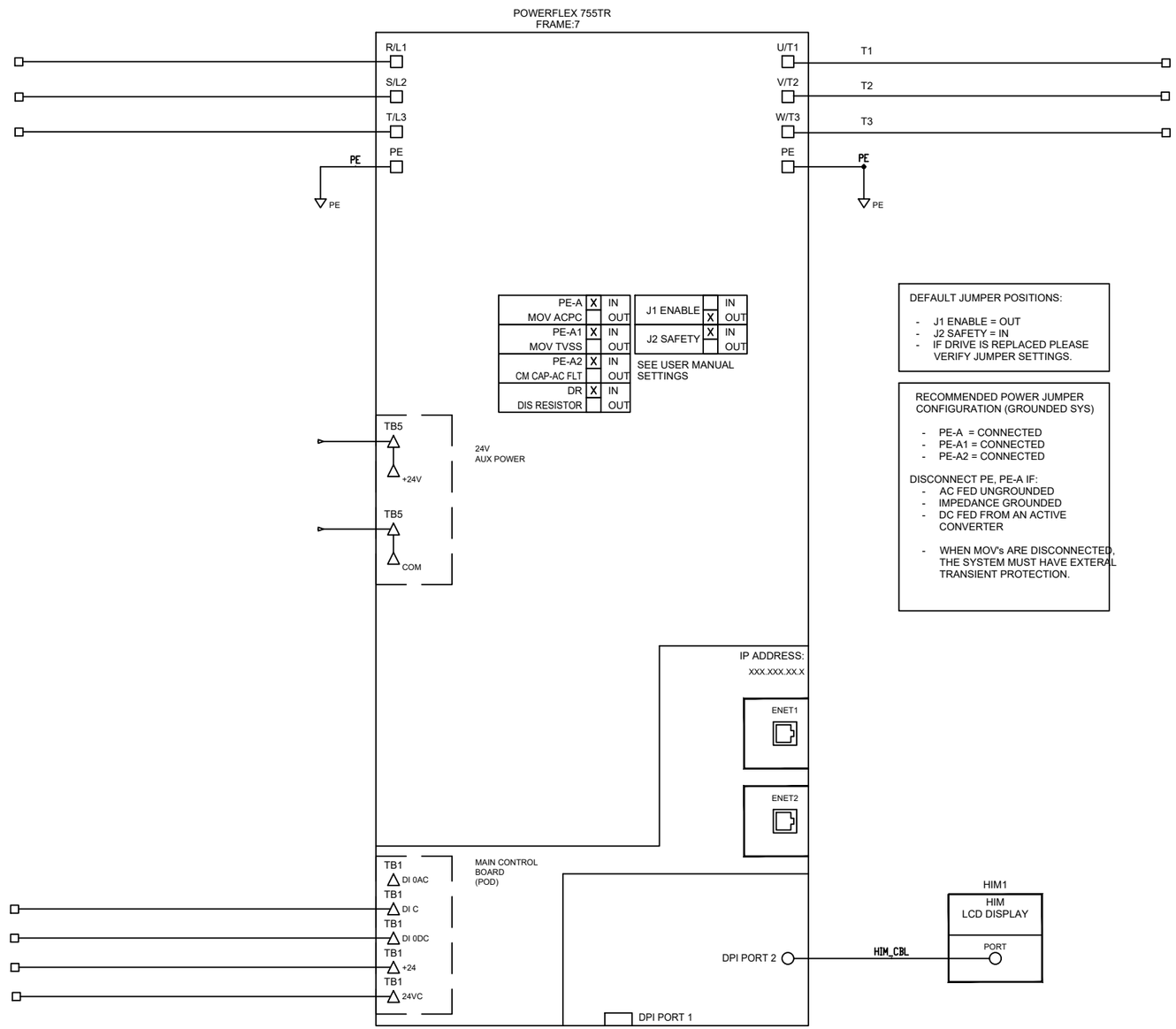

PE-A	X	IN	J1 ENABLE		IN
MOV ACPC		OUT		X	OUT
PE-A1	X	IN	J2 SAFETY	X	IN
MOV TVSS		OUT			OUT
PE-A2	X	IN			
CM CAP-AC FLT		OUT			
DR	X	IN			
DIS RESISTOR		OUT			

SEE USER MANUAL SETTINGS

DEFAULT JUMPER POSITIONS:

- J1 ENABLE = OUT
- J2 SAFETY = IN
- IF DRIVE IS REPLACED PLEASE VERIFY JUMPER SETTINGS.

RECOMMENDED POWER JUMPER CONFIGURATION (GROUNDED SYS)

- PE-A = CONNECTED
- PE-A1 = CONNECTED
- PE-A2 = CONNECTED

DISCONNECT PE, PE-A IF:

- AC FED UNGROUNDED
- IMPEDANCE GROUNDED
- DC FED FROM AN ACTIVE CONVERTER
- WHEN MOV's ARE DISCONNECTED, THE SYSTEM MUST HAVE EXTERAL TRANSIENT PROTECTION.

DRIVE LEGEND

POWER TERMINAL

CONTROL TERMINAL

TORQUE ALL FIELD CONNECTIONS TO THE VALUE SPECIFIED IN THE NOTE SHEETS.
ALL FACTORY WIRED CONNECTIONS HAVE BEEN PROPERLY TORQUED AND NEED NOT BE CHECKED.
REFER DRIVE INSTALLATION MANUAL FOR CUSTOMER WIRE RANGE ,TORQUE VALUES.

Rockwell Automation

CONFIDENTIAL AND PROPRIETARY INFORMATION. THIS DOCUMENT CONTAINS CONFIDENTIAL AND PROPRIETARY INFORMATION OF ROCKWELL AUTOMATION, INC. AND MAY NOT BE USED, COPIED OR DISCLOSED TO OTHERS, EXCEPT WITH THE AUTHORIZED WRITTEN PERMISSION OF ROCKWELL AUTOMATION, INC.

DESCRIPTION	STANDARD_PF755_TL_TR_F7_SCHEMATIC NEMA	DATE	2021-12-13
		SHEET	1 OF 1
CREATED BY	TPS1	CHANGED BY	
SIZE	B	DIR	10006489692
VER	00		