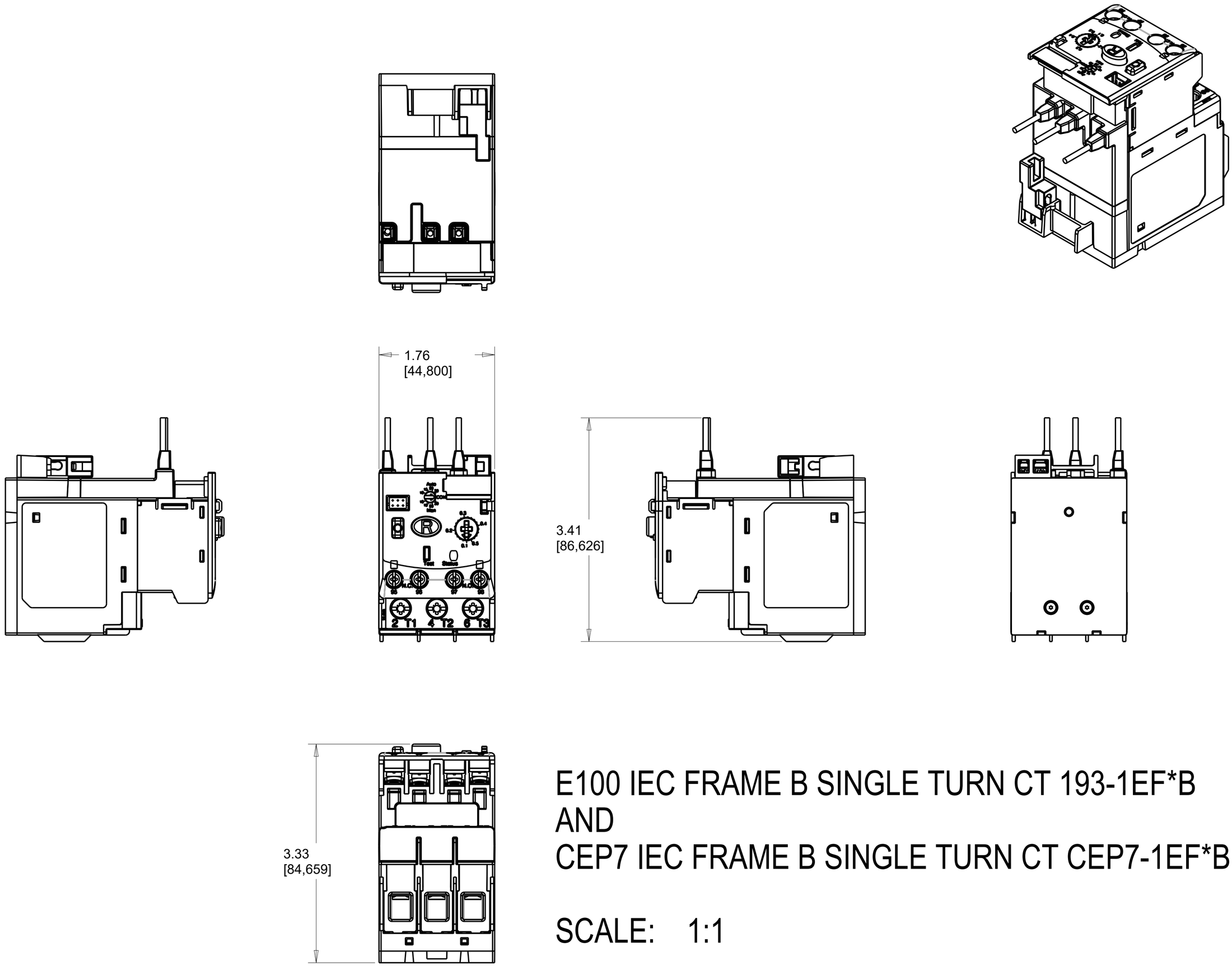

E100 IEC FRAME B SINGLE TURN CT 193-1EF*B
AND
CEP7 IEC FRAME B SINGLE TURN CT CEP7-1EF*B

SCALE: 1:1