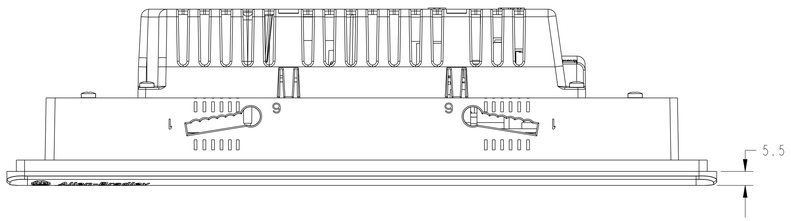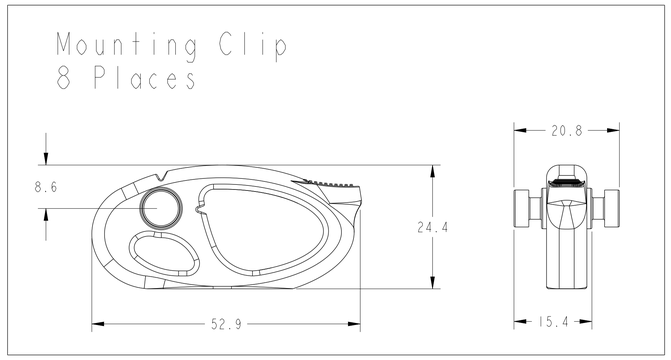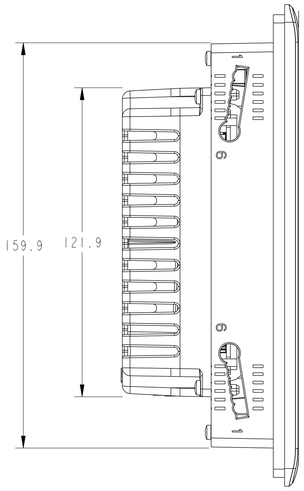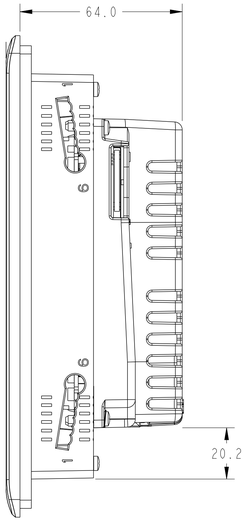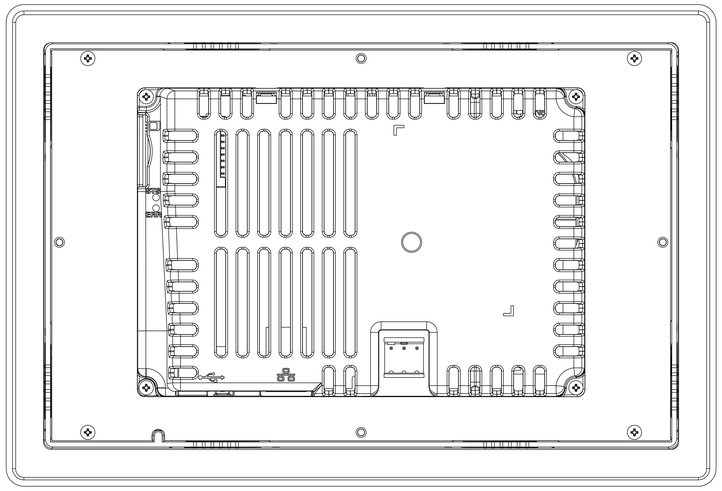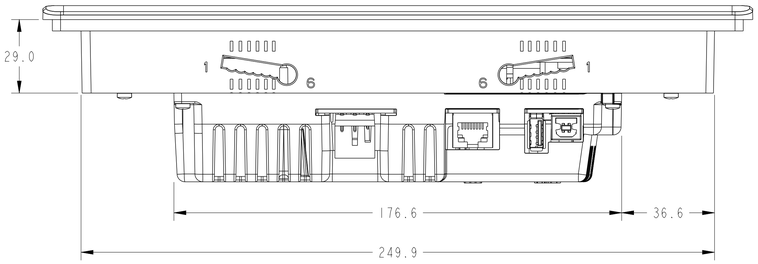PanelView 5310, 9 inch Wide Display, With Touchscreen
NOTE: All Dimensions are in mm