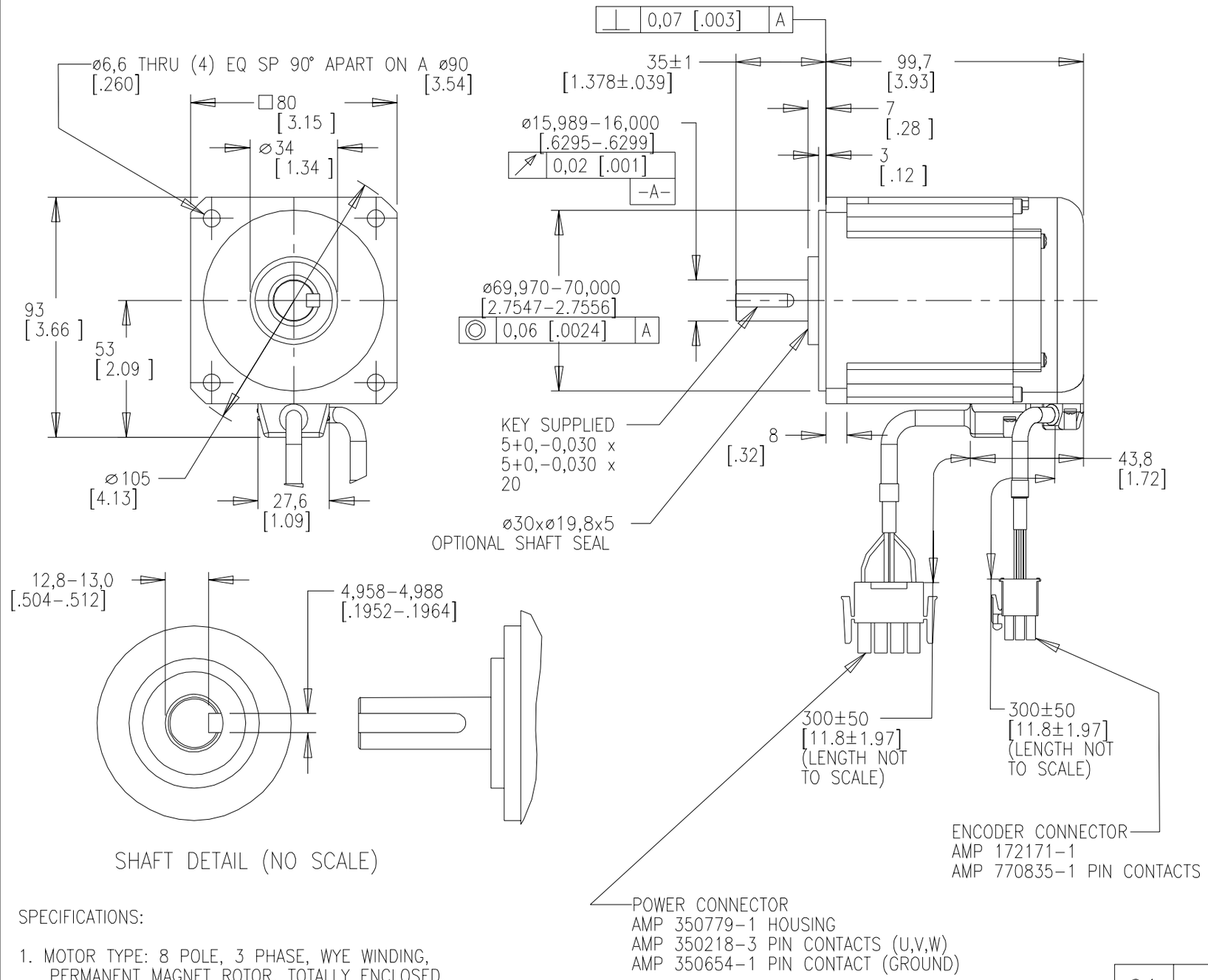

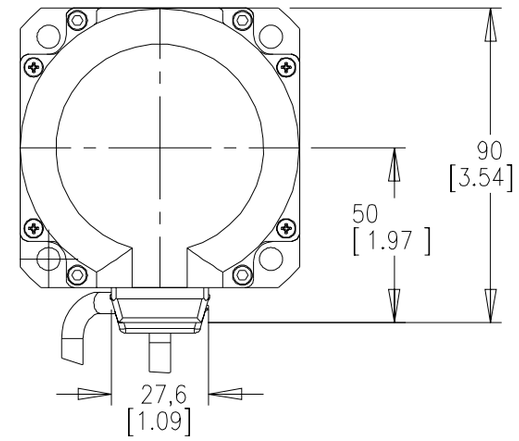

SHAFT DETAIL (NO SCALE)

PIN–OUT		
ENCODER CONNECTOR		
PIN	FUNCTION	COLOR
1–6	–	–
7	EPWR	RED
8	ECOM + BAT–	BROWN/BLACK + BLACK
9	SHIELD	BLACK SHRINK
10–11	–	–
12	SD+	BLUE
13	SD–	BLUE/BLACK
14	BAT+	BROWN
15	–	–

PIN–OUT		
POWER CONNECTOR		
PIN	FUNCTION	COLOR
1	U	RED
2	V	WHITE
3	W	BLACK
4	GROUND	YELLOW/GREEN

SPECIFICATIONS:

1. MOTOR TYPE: 8 POLE, 3 PHASE, WYE WINDING, PERMANENT MAGNET ROTOR, TOTALLY ENCLOSED, NON VENTILATED.
2. CONTINUOUS STALL TORQUE: 2.60 Nm (23 LB–IN) MAX AT 125°C WINDING TEMPERATURE, IN A 40°C AMBIENT, WHEN MOUNTED ON A 12 INCH SQUARE X 1/2 INCH THICK ALUMINUM HEAT SINK.
3. OPERATING SPEED: 5000 RPM MAX.
4. Ke: 38±10% V/KRPM 0–PEAK (PHASE TO PHASE) AT 20–30°C.
5. SERIAL ENCODER, WITH 16 BIT MULTI–TURN AND 17 BIT SINGLE TURN ABSOLUTE POSITION DATA.
6. FOR ADDITIONAL SPECIFICATIONS SEE TLA2530PBJ32AAESE.

REV	ECN	BY	REVISION DESCRIPTION	DATE	CHKR
01	1007016	SJ	RELEASED	—	—

UNLESS OTHERWISE SPECIFIED
DO NOT SCALE DRAWING
DIMENSIONS ARE IN MILLIMETERS
WITH INCHES REFERENCED [X.X]
UNTOLERANCED DIMENSIONS ARE REFERENCE
THIRD ANGLE PROJECTION

DRAWN BY	DATE	DESIGN ENGR	DATE
SJ	3–09–04	—	

TL–A2530P–BJ32AA,ESM

ProE Version	Modified
0	0

DXF FILE AVAILABLE

Allen–Bradley

PART NO. TLA2530PBJ32AAESM

SCALE : 1	DWG SIZE	SHEET
0.500	B	1 OF 1