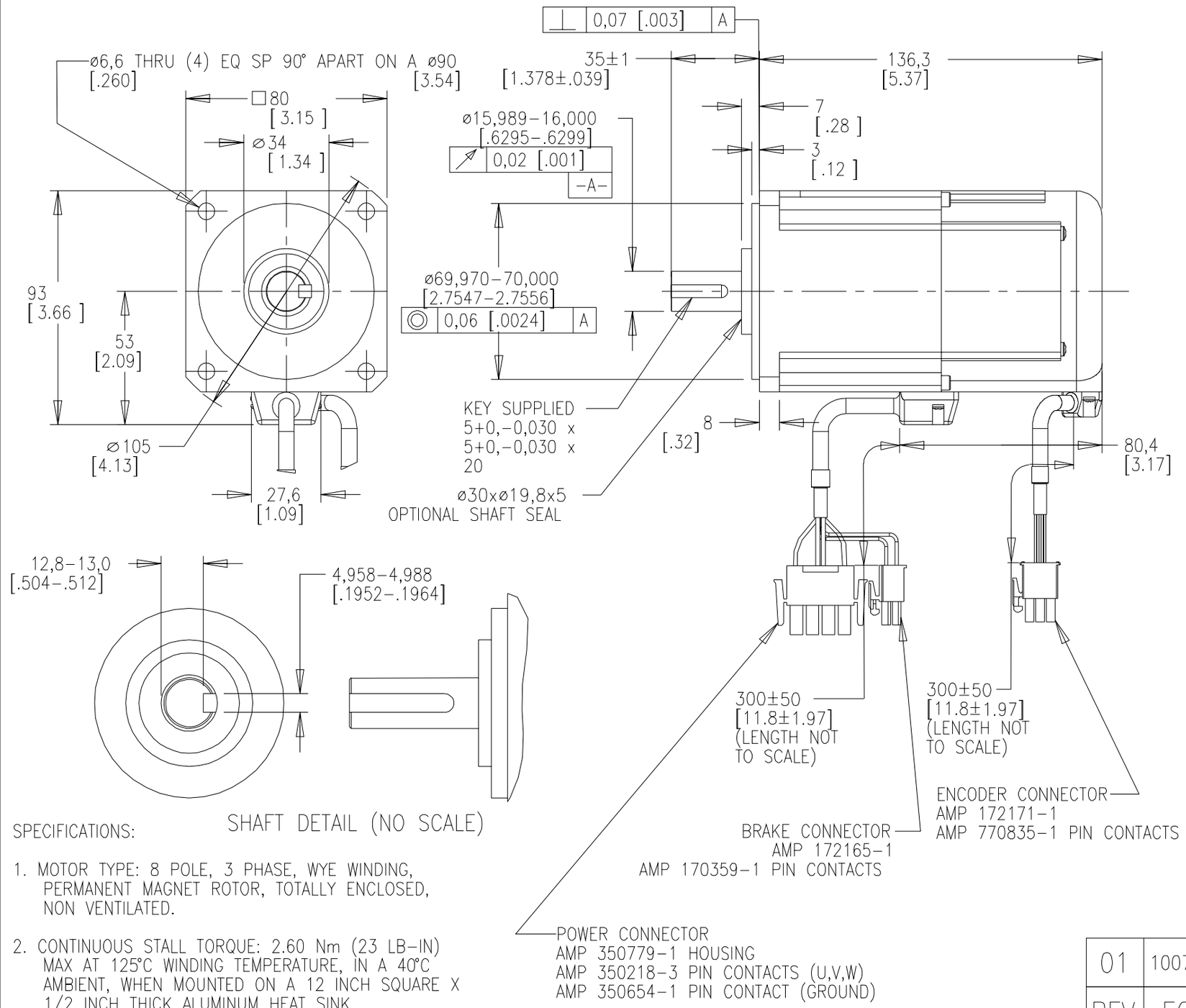

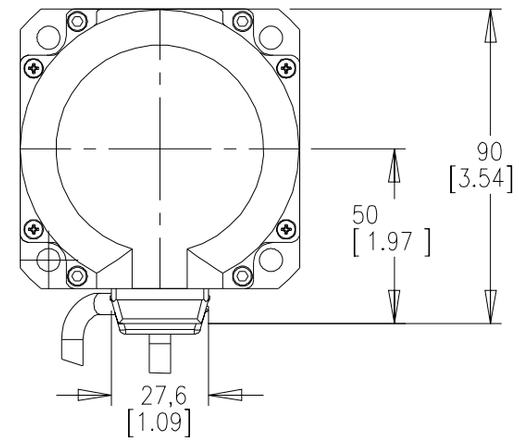

SHAFT DETAIL (NO SCALE)

PIN–OUT		
ENCODER CONNECTOR		
PIN	FUNCTION	COLOR
1–6	–	–
7	EPWR	RED
8	ECOM + BAT–	BROWN/BLACK + BLACK
9	SHIELD	BLACK SHRINK
10–11	–	–
12	SD+	BLUE
13	SD–	BLUE/BLACK
14	BAT+	BROWN
15	–	–

PIN–OUT		
POWER CONNECTOR		
PIN	FUNCTION	COLOR
1	U	RED
2	V	WHITE
3	W	BLACK
4	GROUND	YELLOW/GREEN

PIN–OUT		
BRAKE CONNECTOR		
PIN	FUNCTION	COLOR
1	BR+	YELLOW
2	BR–	BLUE

SPECIFICATIONS:

1. MOTOR TYPE: 8 POLE, 3 PHASE, WYE WINDING, PERMANENT MAGNET ROTOR, TOTALLY ENCLOSED, NON VENTILATED.
2. CONTINUOUS STALL TORQUE: 2.60 Nm (23 LB–IN) MAX AT 125°C WINDING TEMPERATURE, IN A 40°C AMBIENT, WHEN MOUNTED ON A 12 INCH SQUARE X 1/2 INCH THICK ALUMINUM HEAT SINK.
3. OPERATING SPEED: 5000 RPM MAX.
4. Ke: 38±10% V/KRPM 0–PEAK (PHASE TO PHASE) AT 20–30°C.
5. SERIAL ENCODER, WITH 16 BIT MULTI–TURN AND 17 BIT SINGLE TURN ABSOLUTE POSITION DATA.
6. BRAKE: 24VDC, 2.5 Nm (22 LB–IN) MAX HOLDING TORQUE. BRAKE RELEASES WHEN VOLTAGE APPLIED, EITHER POLARITY.
7. FOR ADDITIONAL SPECIFICATIONS SEE TLA2530PBJ34AAESE.

REV	ECN	BY	REVISION DESCRIPTION	DATE	CHKR
01	1007016	SJ	RELEASED	—	—

UNLESS OTHERWISE SPECIFIED
DO NOT SCALE DRAWING
DIMENSIONS ARE IN MILLIMETERS
WITH INCHES REFERENCED [X.X]
UNTOLERANCED DIMENSIONS ARE REFERENCE
THIRD ANGLE PROJECTION

DRAWN BY SJ DATE 3–09–04
DESIGN ENGR — DATE

TL–A2530P–BJ34AA,ESM

ProE Version 0 Modified 0

DXF FILE AVAILABLE

Allen–Bradley

PART NO. TLA2530PBJ34AAESM

SCALE : 1 0.500 | DWG SIZE B | SHEET 1 OF 1