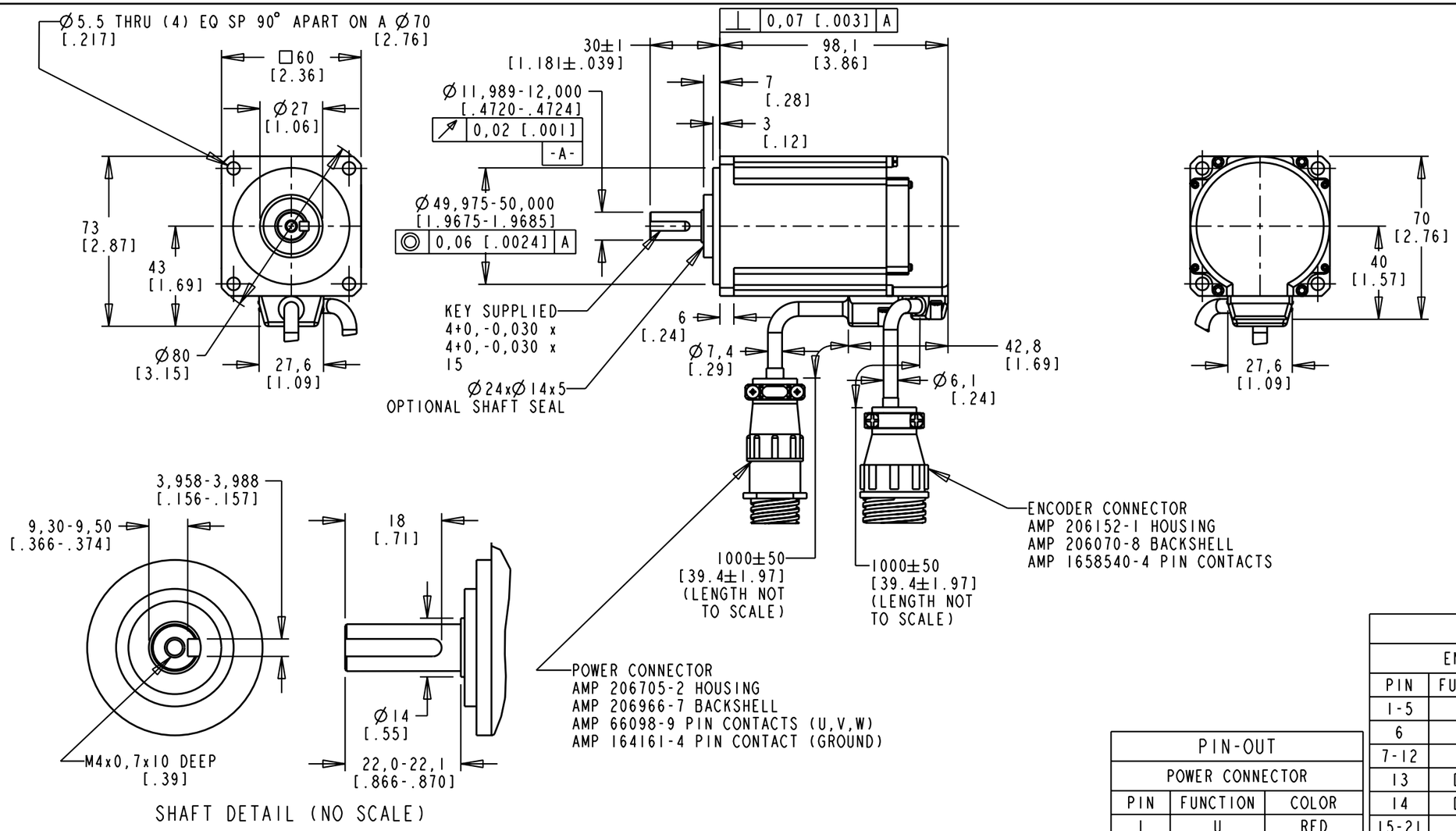

SHAFT DETAIL (NO SCALE)

PIN-OUT		
POWER CONNECTOR		
PIN	FUNCTION	COLOR
1	U	RED
2	V	WHITE
3	W	BLACK
4	-	-
5	GROUND	YELLOW/GREEN

PIN-OUT		
ENCODER CONNECTOR		
PIN	FUNCTION	COLOR
1-5	-	-
6	BAT+	BROWN
7-12	-	-
13	DATA+	BLUE
14	DATA-	BLUE/BLACK
15-21	-	-
22	EPWR 5V	RED
23	ECOM & BAT-	BLACK
24	SHIELD	DRAIN WIRE
25-28	-	-

NOTES:

1. FOR ADDITIONAL SPECIFICATIONS SEE 10000005501, CATALOG NO. TLY-A230P-BJ62AA.

REFERENCES	
VERSION/ CHANGE NUMBER	
00	10003216

UNLESS OTHERWISE SPECIFIED

DO NOT SCALE DRAWING
DIMENSIONS ARE IN MILLIMETERS WITH INCHES REFERENCED [X]
UNTOLERANCED DIMENSIONS ARE REFERENCE
3RD ANGLE PROJECTION

DESCRIPTION
TLY-A230P-BJ62AA,ESM

CAD DOCUMENT

Rockwell Automation

Allen-Bradley

DR. S.JOHNSON | DATE 7/02/07 | SHEET 1 OF 1

DXF 2D OR STEP 3D FILE AVAILABLE

DWG. SIZE B

DOCUMENT NUMBER 10000005603